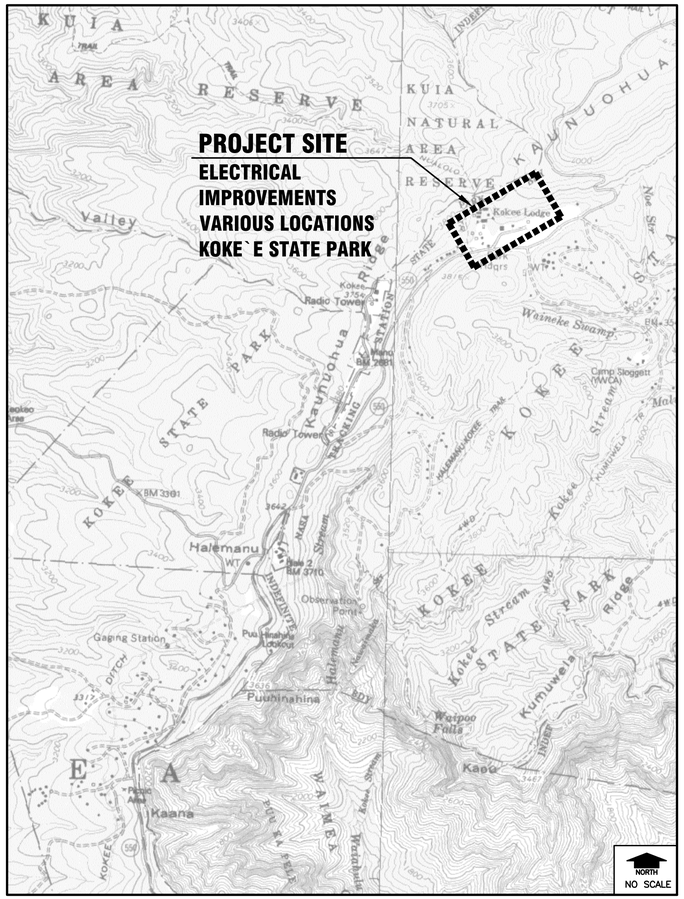

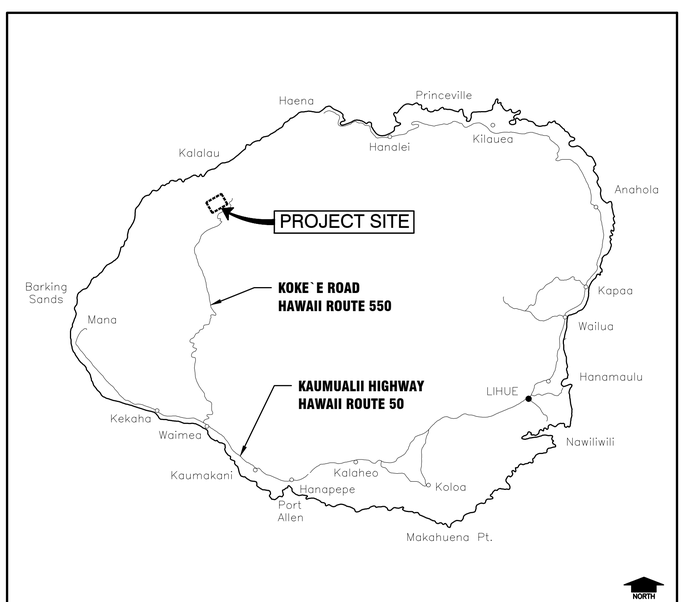

STATE OF HAWAII

DEPARTMENT OF LAND AND NATURAL RESOURCES

ENGINEERING DIVISION

FOR

DIVISION OF STATE PARKS

JOB NO. F46C602F

KOKE`E STATE PARK ELECTRICAL IMPROVEMENTS

WAIMEA, KAUAI, HAWAII

TMK: (4th Division) 1-4-001:013

INDEX

DESCRIPTION	DRAWING NO.	SHEET NO.
TITLE SHEET	T-001	1
CONSTRUCTION NOTES - 1	G-001	2
CONSTRUCTION NOTES - 2	G-002	3
ELECTRICAL SYMBOLS, ABBREV, AND NOTES	E-001	4
STUDY OVERALL SITE PLAN	E-101	5
ELECTRICAL DEMO PLAN A (GARAGES AND STORAGE)	E-102	6
ELECTRICAL DEMO PLAN B (WORKSHOP AND RANGER'S COTTAGE)	E-103	7
ELECTRICAL DEMO PLAN C (PARK HEADQUARTERS)	E-104	8
ELECTRICAL PLAN A (GARAGES AND STORAGE)	E-105	9
ELECTRICAL PLAN B (WORKSHOP AND RANGER'S COTTAGE)	E-106	10
ELECTRICAL PLAN C (PARK HEADQUARTERS)	E-107	11
METERING ELEVATIONS - 1	E-201	12
METERING ELEVATIONS - 2	E-202	13
RANGER'S COTTAGE ELEVATIONS	E-203	14
PARK HEADQUARTERS ELEVATIONS	E-204	15
EXTERIOR ELECTRICAL DETAILS	E-501	16
ONE-LINE DIAGRAM - (METERS A, B AND C) - DEMO	E-601	17
ONE-LINE DIAGRAM - PARK HEADQUARTERS	E-602	18
ONE-LINE DIAGRAM - MAINT SHED-SHED-KOKEE LODGE STORAGE - DEMO	E-603	19
ONE-LINE DIAGRAM - MAINT SHED-SHED-KOKEE LODGE STORAGE	E-604	20
PANEL SCHEDULES	E-701	21

APPROVED: DATE: 05/07/2026

ALAN B. CARPENTER
ACTING ADMINISTRATOR
DIVISION OF STATE PARKS
DEPARTMENT OF LAND AND NATURAL RESOURCES

APPROVED: DATE: 05/07/2026

DINA U. LAU, P.E.
ACTING CHIEF ENGINEER
ENGINEERING DIVISION
DEPARTMENT OF LAND AND NATURAL RESOURCES

DRAWING NO.
T-001

GENERAL CONSTRUCTION NOTES

1. ALL CONSTRUCTION WORK IS TO BE CONSTRUCTED IN ACCORDANCE WITH THE ATTACHED SPECIFICATIONS AND PUBLICATIONS "HAWAII STANDARD SPECIFICATIONS FOR ROAD AND BRIDGE CONSTRUCTION, 2005" AND "STANDARD DETAILS FOR PUBLIC WORKS CONSTRUCTION DATED 9/84" WHEN REFERENCED.

2. NO WORK SHALL BE DONE ON SATURDAYS, SUNDAYS AND HOLIDAYS, AND/OR IN EXCESS OF EIGHT (8) HOURS EACH DAY WITHOUT THE WRITTEN CONSENT OF THE ENGINEER. NO WORK SHALL BE DONE AT NIGHT UNLESS AUTHORIZED BY THE ENGINEER.

3. THE CONTRACTOR SHALL VERIFY AND CHECK ALL DIMENSIONS AND DETAILS ON THE CONSTRUCTION DRAWINGS AND SPECIFICATIONS FOR ANY DISCREPANCY. ANY DISCREPANCY SHALL BE BROUGHT TO THE ATTENTION OF THE ENGINEER FOR CLARIFICATION.

4. WORK INCIDENTAL TO THE CONTRACT AND NECESSARY TO COMPLETE THE PROJECT, ALTHOUGH NOT SPECIFICALLY REFERRED TO ON THE CONTRACT DOCUMENTS, SHALL BE FURNISHED AND PERFORMED BY THE CONTRACTOR.

5. IN PERFORMING ALL WORK, THE CONTRACTOR SHALL EXERCISE DUE CARE AND CAUTION NECESSARY TO AVOID ANY DAMAGE TO AND IMPAIRMENT IN THE USE OF ANY EXISTING UTILITY LINE. ANY DAMAGE INFLICTED ON EXISTING UTILITY LINES RESULTING FROM THE CONTRACTOR'S OPERATIONS SHALL BE IMMEDIATELY REPAIRED OR RESTORED AS DIRECTED BY THE ENGINEER AT THE CONTRACTOR'S EXPENSE.

6. THE CONTRACTOR AGREES THAT HE SHALL ASSUME SOLE AND COMPLETE RESPONSIBILITY FOR THE JOB SITE CONDITIONS DURING THE COURSE OF CONSTRUCTION OF THIS PROJECT, INCLUDING THE SAFETY OF ALL PERSONS AND PROPERTY; THAT THIS REQUIREMENT SHALL APPLY CONTINUOUSLY AND NOT BE LIMITED TO NORMAL WORKING HOURS AND THAT THE CONTRACTOR SHALL DEFEND, INDEMNIFY AND HOLD THE OWNER AND ENGINEER HARMLESS FROM ANY AND ALL LIABILITY, REAL OR ALLEGED, IN CONNECTION WITH THE PERFORMANCE OF WORK ON THIS PROJECT, EXCEPTING FOR LIABILITY ARISING FROM THE SOLE NEGLIGENCE OF THE OWNER OR ENGINEER.

7. THE UNDERGROUND PIPES, CABLES OR DUCTLINES KNOWN TO EXIST BY THE ENGINEER FROM HIS SEARCH OF RECORDS ARE INDICATED ON THE PLANS. LOCATION OF EXISTING UTILITY LINES SHOWN ON THE PLAN AND PROFILE ARE APPROXIMATE. THEREFORE, NO ASSURANCE CAN BE PROVIDED THAT THE ACTUAL LOCATIONS WILL BE PRECISELY AS SHOWN ON THE CONTRACT DRAWINGS. THE CONTRACTOR SHALL VERIFY THE LOCATION AND DEPTH OF THE FACILITIES PRIOR TO EXCAVATING IN THE AREA AND EXERCISE PROPER CARE WHILE EXCAVATING. WHEREVER CONNECTIONS OF NEW UTILITIES TO EXISTING UTILITIES ARE SHOWN ON THE PLANS, THE CONTRACTOR SHALL EXPOSE THE EXISTING LINES AT THE PROPOSED CONNECTIONS TO VERIFY THEIR LOCATIONS AND CONNECTING CONDITIONS.

8. ADEQUATE PROVISIONS FOR TRAFFIC CONTROL SHALL BE PROVIDED IN ACCORDANCE WITH "HAWAII ADMINISTRATIVE RULES GOVERNING THE USE OF TRAFFIC CONTROL DEVICES AT WORK SITES ON OR ADJACENT TO PUBLIC STREETS AND HIGHWAYS OF HAWAII" AND WITH FEDERAL HIGHWAY ADMINISTRATION "MANUAL ON UNIFORM TRAFFIC CONTROL DEVICES FOR STREETS AND HIGHWAYS", 2003 WITH THE LATEST REVISIONS, AND TO THE SATISFACTION OF THE ENGINEER.

9. THE CONTRACTOR SHALL CONDUCT ALL TESTS AS SPECIFIED AND BE RESPONSIBLE FOR EXPENSES INCURRED IN CONDUCTING THESE TESTS.

10. CONTRACTOR SHALL MAKE ARRANGEMENTS FOR UTILITIES SUCH AS ELECTRICITY, WATER, ETC., REQUIRED FOR HIS OPERATIONS AND ALL COSTS SHALL BE BORNE BY THE CONTRACTOR.

11. THE CONTRACTOR SHALL PROVIDE TO THE ENGINEER RECORD DRAWINGS OF ALL UTILITIES AND STRUCTURES UPON COMPLETION OF WORK. A PROFILE ALONG THE CENTERLINE SHALL ALSO BE PROVIDED TO VERIFY THE FINISHED GRADES OF ROADWAYS.

12. WRITTEN DIMENSIONS TAKE PRECEDENCE OVER SCALED DIMENSIONS.

13. ALL PERMITS SHALL BE OBTAINED AND PAID FOR BY THE CONTRACTOR, UNLESS OTHERWISE INDICATED.

14. THE CONTRACTOR SHALL COORDINATE THE STORAGE OF HIS MATERIAL WITH THE ENGINEER.

15. ALL CONSTRUCTION AND GRADING STAKEOUT SHALL BE DONE BY A SURVEYOR REGISTERED IN THE STATE OF HAWAII. CONTRACTOR SHALL SUBMIT COPIES OF THE STAKEOUT DOCUMENTATION INCLUDING CUT SHEETS, AND ALL COSTS SHALL BE BORNE BY THE CONTRACTOR.

16. THE CONTRACTOR SHALL OBSERVE AND COMPLY WITH ALL FEDERAL, STATE, AND LOCAL LAWS REQUIRED FOR THE PROTECTION OF PUBLIC HEALTH, SAFETY, AND ENVIRONMENTAL QUALITY.

17. THE CONTRACTOR SHALL BE REQUIRED TO PROVIDE ADEQUATE, SAFE NON-SKID BRIDGING MATERIAL OVER TRENCHES, INCLUDING SHORING WHEN TRENCHING IN PAVEMENT AREAS AND AREAS SUBJECT TO VEHICULAR TRAFFIC TO HANDLE ALL TYPES OF VEHICULAR TRAFFIC. NO TRENCH SHALL BE LEFT OPEN DURING NON-WORKING HOURS, STRIKES, OR JOB SHUTDOWN.

18. THE CONTRACTOR SHALL REMOVE ALL SILT AND DEBRIS RESULTING FROM HIS WORK. ANY NECESSARY REMEDIAL ACTION AS REQUIRED BY THE STATE OR COUNTY ENGINEER SHALL BE DONE BY THE CONTRACTOR AT HIS OWN EXPENSE.

19. CONSTRUCTION DEBRIS AND WASTE SHALL BE DEPOSITED AT AN APPROPRIATE SITE IN ACCORDANCE WITH ALL COUNTY, STATE AND FEDERAL LAWS, RULES AND REGULATIONS. THE CONTRACTOR SHALL INFORM THE ENGINEER OF THE LOCATION OF THE DISPOSAL SITE.

GENERAL CONSTRUCTION NOTES (Cont.)

20. GRADING AROUND ALL STRUCTURES, CONCRETE PADS AND PIPE RESTS, UNLESS OTHERWISE SHOWN OR INDICATED, SHALL BE MINIMUM 1" ABOVE THE SURROUNDING GRADE AT THE EDGE OF CONCRETE. GRADE SHALL SLOPE AWAY FROM THE EDGE OF CONCRETE AT MAX. 1" PER FOOT TO MEET EXISTING GRADE. PROVISIONS FOR DRAINAGE AROUND STRUCTURES SHALL BE PROVIDED.

21. ALL GRADING OPERATIONS SHALL CONFORM WITH APPLICABLE PROVISIONS OF THE WATER POLLUTION CONTROL AND WATER QUALITY STANDARDS CONTAINED IN THE PUBLIC HEALTH REGULATIONS, STATE DEPARTMENT OF HEALTH.

22. ALL SLOPES, SWALES, AND EXPOSED AREAS SHALL BE SEEDED OR PLANTED AS SOON AS PRACTICABLE AFTER THE WORK HAS BEEN COMPLETED.

23. DLNR WILL DELEGATE THE CONTRACTOR AS THE AUTHORIZED REPRESENTATIVE TO SUBMIT ALL NECESSARY DOCUMENTS AND REPORTS AS REQUIRED BY DOH AND COUNTY OF KAUAI DIRECTLY TO THEIR OFFICES AT NO COSTS TO THE STATE.

24. CONTRACTOR SHALL REMOVE ALL THE TREES WITHIN THE ALIGNMENT OF THE WATER LINES AT NO EXTRA COST TO THE STATE.

EROSION CONTROL / BMP NOTES

1. MEASURES TO CONTROL EROSION AND OTHER POLLUTANTS SHALL BE IN PLACE BEFORE ANY CONSTRUCTION WORK IS INITIATED. THESE MEASURES SHALL BE PROPERLY CONSTRUCTED AND MAINTAINED THROUGHOUT THE CONSTRUCTION PERIODS.

2. ALL CONTROL MEASURES SHALL BE CHECKED AND REPAIRED AS NECESSARY.

3. CONSTRUCT TEMPORARY SILT FENCE AS SHOWN PER PLANS.

4. ALL STORM DRAIN INLETS THAT MAY RECEIVE RUNOFF AS A RESULT OF THE CONSTRUCTION WORK SHALL USE AN INLET FILTER DEVICE. INLET FILTERS SHALL REMAIN UNTIL COMPLETION OF CONSTRUCTION WORK. CONTRACTOR SHALL PERIODICALLY INSPECT INLET FILTERS, ESPECIALLY DURING HEAVY RAINFALL, TO ENSURE DRAINAGE THROUGH MATERIAL IS MAINTAINED.

5. AT THE END OF THE GRADING OPERATION, EXISTING STORM DRAIN INLETS SURROUNDING THE PROJECT SITE SHALL BE INSPECTED AND ANY ACCUMULATED SEDIMENT AND DEBRIS FOUND IN THE STORM DRAIN INLETS SHALL BE REMOVED. FLUSHING INTO THE STORM DRAINS IS PROHIBITED.

6. GOOD HOUSEKEEPING SHALL BE UTILIZED TO ENSURE PROTECTION OF ROADWAYS FROM MUD, DIRT, AND DEBRIS.

7. THE CONTRACTOR SHALL ENSURE THAT ALL TIRES OF CONSTRUCTION VEHICLES ARE SUFFICIENTLY CLEANED OFF SO THE DIRT OR DEBRIS IS NOT TRACKED OFF THE CONSTRUCTION SITE. WASHING OFF TIRES WITH WATER WILL NOT BE ACCEPTABLE UNLESS THE RUNOFF IS CONTAINED AND DOES NOT ENTER THE STORM DRAIN SYSTEM OR ONTO THE STATE'S ROW.

8. THE CONTRACTOR SHALL ENSURE THAT EXISTING ROADWAYS USED TO ACCESS THE PROJECT ARE CLEANED OF ALL DEBRIS, TRASH, DIRT, MUD, ETC., THROUGHOUT THE WORK DAY.

9. THE FINAL LIFT OF EACH DAY'S WORK SHALL BE COMPACTED TO PREVENT EROSION OF FILL MATERIAL.

10. ANY DIRT OR GRASSED AREA DISTURBED SHALL BE RESTORED BY SEEDED HYDRO-MULCH. CONTRACTOR TO ENSURE GRASS IS FULLY ESTABLISHED.

11. THE GRASS MAINTENANCE PERIOD SHALL BE SIXTY (60) CALENDAR DAYS OR UNTIL ACCEPTANCE OF ALL ITEMS OF WORK UNDER THIS CONTRACT, WHICHEVER IS LATER.

REQUIREMENTS OF STATE HISTORIC PESERVATION DIVISION

1. IN THE UNLIKELY EVENT THAT SUBSURFACE HISTORIC RESOURCES, SUCH AS HUMAN SKELETAL REMAINS, STRUCTURAL REMAINS, CULTURAL DEPOSITS, ARTIFACTS, SAND DEPOSITS, OR SINK HOLDS ARE DISCOVERED DURING DEMOLITION AND/OR CONSTRUCTION WORK, THE WORK SHOULD BE STOPPED IN THE IMMEDIATE AREA OF THE DISCOVERY. THE FIND SHOULD BE PROTECTED FROM FURTHER DISTURBANCE, AND THE STATE HISTORIC PRESERVATION DIVISION SHOULD BE CONTACTED AT (808) 692-8015.

REVISION NO.	SYM.	DESCRIPTION	SHT./OF	DATE	APPROVED

JON T. MURAOKA
LICENSED PROFESSIONAL ENGINEER
No. 8843-C
HAWAII, USA

This work was prepared by me or under my supervision and construction of this project will be under my observation. Observation of construction as defined by "Hawaii Administrative Rules, Title 16, Dept. of Commerce & Consumer Affairs, Chapter 115, Professional Engineers, Architects, Surveyors and Landscape Architects."

FUKUNAGA & ASSOCIATES, INC.
License Expiration Date: April 30, 2028

STATE OF HAWAII
DEPARTMENT OF LAND AND NATURAL RESOURCES
ENGINEERING DIVISION

KOKE'E STATE PARK
ELECTRICAL IMPROVEMENTS
WAIMEA, KAUAI, HAWAII

CONSTRUCTION NOTES - 1

FUKUNAGA AND ASSOCIATES, INC

DESIGNED:	AA	SUBMITTED:	
DRAWN:	JT	DATE:	APRIL 2026
CHECKED:	JTM	SCALE:	AS SHOWN
APPROVED:	Dina Lau E-signed 2026-05-07 07:15AM HST dina.u.lau@hawaii.gov State of Hawaii Civil Engineer	DRAWING NO.	G-001
CHIEF ENGIN			

ENVIRONMENTAL PROTECTION NOTES

1. IN ACCORDANCE WITH CHAPTER 11-60.1, AIR POLLUTION CONTROL, TITLE 11, HAWAII ADMINISTRATIVE RULES, THE CONTRACTOR SHALL BE RESPONSIBLE FOR ENSURING THAT EFFECTIVE CONTROL MEASURES ARE PROVIDED TO MINIMIZE OR PREVENT ANY VISIBLE DUST EMISSION CAUSED BY THE CONSTRUCTION WORK FROM IMPACTING THE SURROUNDING AREAS INCLUDING THE OFF-SITE ROADWAYS USED TO ENTER/EXIT THE PROJECT. THESE MEASURES INCLUDE BUT ARE NOT LIMITED TO THE USE OF WATER WAGONS, SPRINKLER SYSTEMS, DUST FENCES, ETC.

2. IN ACCORDANCE WITH CHAPTER 11-55, WATER POLLUTION CONTROL AND CHAPTER 11-54, WATER QUALITY STANDARDS, TITLE 11, HAWAII ADMINISTRATIVE RULES, THE CONTRACTOR SHALL BE RESPONSIBLE FOR ENSURING THAT THE BEST MANAGEMENT PRACTICE (BMP) TO MINIMIZE OR PREVENT THE DISCHARGE OF SEDIMENTS, DEBRIS, AND OTHER WATER POLLUTANT INTO STATE WATERS IS PROVIDED.

3. IN ACCORDANCE WITH CHAPTER 11-58, SOLID WASTE MANAGEMENT CONTROL, TITLE 11, HAWAII ADMINISTRATIVE RULES, THE CONTRACTOR SHALL BE RESPONSIBLE FOR ENSURING THAT GRUB MATERIAL, DEMOLITION WASTE AND CONSTRUCTION WASTE GENERATED BY THE PROJECT ARE DISPOSED OF IN A MANNER OR AT A SITE APPROVED BY THE STATE DEPARTMENT OF HEALTH. DISPOSAL OF ANY OF THESE WASTES BY BURNING IS PROHIBITED.

4. THE CONTRACTOR SHALL BE RESPONSIBLE FOR OBTAINING AND PAYING FOR ALL APPLICABLE PERMITS FROM THE DEPARTMENT OF HEALTH INCLUDING BUT NOT LIMITED TO NATIONAL POLLUTION DISCHARGE ELIMINATION SYSTEM (NPDES) PERMITS FOR STORM WATER, HYDROTESTING WATER AND DEWATERING DISCHARGES PRIOR TO COMMENCING CONSTRUCTION.

TEMPORARY DUST CONTROL

1. THE PROJECT SITE THAT IS GRADED OR CLEARED OF VEGETATION SHALL BE DAMPENED SEVEN (7) DAYS A WEEK FOR DUST CONTROL. AT THE END OF EACH DAY, THE SITE SHALL BE SUFFICIENTLY DAMPENED SO THAT THE SITE WILL REMAIN MOISTENED DURING THE NIGHT.

2. THE CONTRACTOR SHALL CONDUCT HIS OPERATIONS SO THAT EXCAVATION, EMBANKMENT, AND IMPORTED MATERIAL SHALL BE DAMPENED TO PREVENT DUST PROBLEMS.

3. THE CONTRACTOR SHALL SUBMIT PLANS, SCHEDULES AND/OR WRITTEN MEASURES WHICH PROVIDE FOR DUST CONTROL. THE DUST CONTROL MEASURES SHALL CONTAIN POSITIVE STATEMENTS WHICH REQUIRE ACTIONS OR WORK THAT PREVENT DUST PROBLEMS. NO WORK WILL BE ALLOWED UNLESS THE DEPARTMENT IS ASSURED THAT DUST PROBLEMS WILL BE MINIMIZED.

TEMPORARY EROSION CONTROL MEASURES

1. TEMPORARY VEGETATIVE COVER SHALL BE PLANTED OR OTHER METHOD OF PROTECTING DISTURBED SURFACE AREA ARE TO BE DONE BEFORE THE END OF THE WORK DAY. CALENDAR DAYS AFTER THE SITE HAS BEEN GRADED OR BARED OF VEGETATION OR IF FINAL GRADING OF THE SITE WILL BE SUSPENDED FOR MORE THAN 15 CALENDAR DAYS.

2. TEMPORARY VEGETATIVE COVER SHALL MEET THE REQUIREMENTS OF SECTION 209 OF THE "HAWAII STANDARD SPECIFICATIONS FOR ROAD AND BRIDGE CONSTRUCTION." TEMPORARY SPRINKLER SYSTEM IS TO BE INSTALLED CONCURRENTLY WITH ALL PLANTINGS. PLANTING AND MAINTENANCE OF GRASS SHALL CONFORM TO THE "HAWAII STANDARD SPECIFICATIONS FOR ROAD AND BRIDGE CONSTRUCTION, 2005."

3. MINIMIZE TIME OF CONSTRUCTION.

4. CONSTRUCT DRAINAGE CONTROL FEATURES EARLY.

5. STATION WATER TRUCK ON SITE DURING CONSTRUCTION PERIOD TO PROVIDE FOR IMMEDIATE SPRINKLING AS NEEDED, IN ACTIVE CONSTRUCTION ZONES (WEEKENDS AND HOLIDAYS INCLUDED). DO NOT WASH MUD OR DIRT INTO DRAINAGE SYSTEM.

6. USE TEMPORARY BERMS AND CUT-OFF DITCHES, WHERE NEEDED FOR CONTROL OF EROSION.

7. THE COST FOR TEMPORARY EROSION CONTROL MEASURES WILL NOT BE MEASURED NOR PAID FOR DIRECTLY, BUT WILL BE CONSIDERED AS INCIDENTAL TO AND INCLUDED IN THE APPROPRIATE CONTRACT PAY ITEMS. DISREGARD SUBSECTION 209.04 AND PORTIONS OF 209.05 REGARDING MEASUREMENT AND PAYMENT OF EROSION CONTROL.

PERMANENT EROSION CONTROL MEASURES

1. THE CONTRACTOR SHALL CONSTRUCT PERMANENT DRAINAGE SWALES AS SOON AS PRACTICABLE.

2. THE CONTRACTOR SHALL GRASS THE PROJECT SITES, WHERE INDICATED, WITH BERMUDA GRASS SPRIGS. THE GRASS SHALL BE PLANTED, FERTILIZED, AND MAINTAINED IN ACCORDANCE WITH THE "HAWAII STANDARD SPECIFICATIONS FOR ROAD AND BRIDGE, CONSTRUCTION, 2005."

3. THE CONTRACTOR SHALL GRASS ALL EXPOSED AREAS THAT HAVE BEEN CONSTRUCTED TO FINAL GRADES BY END OF WORK DAY.

4. IN LIEU OF GRASS SPRIGS (NOTE 2), THE CONTRACTOR MAY USE HYDRO-MULCH WITH SEEDLINGS.

WATER POLLUTION AND EROSION CONTROL NOTES

A. GENERAL:

1. THE CONTRACTOR IS REMINDED OF THE REQUIREMENTS OF SECTION 209 – TEMPORARY WATER POLLUTION, DUST AND EROSION CONTROL AND SECTION 620 – DUST CONTROL, IN THE SPECIAL PROVISIONS. SECTION 209 DESCRIBES BUT IS NOT LIMITED TO: SUBMITTAL REQUIREMENTS; SCHEDULING OF A WATER POLLUTION AND EROSION CONTROL CONFERENCE WITH THE ENGINEER; CONSTRUCTION REQUIREMENTS; METHOD OF MEASUREMENT; AND BASIS OF PAYMENT.

2. EFFECTIVE OCTOBER 1, 2008, FOLLOW THE GUIDELINES IN THE "CONSTRUCTION BEST MANAGEMENT PRACTICES FIELD MANUAL", DATED JANUARY 2008 IN DEVELOPING, INSTALLING AND MAINTAINING THE BEST MANAGEMENT PRACTICES (BMP) FOR THE PROJECT.

3. THE CONTRACTOR SHALL FOLLOW THE GUIDELINES IN THE HONOLULU'S," CITY AND COUNTY "RULES FOR SOIL EROSION STANDARDS AND GUIDELINES" FOR ALL PROJECTS ON OAHU. USE APPLICABLE SOIL EROSION GUIDELINES FOR PROJECT ON MAUI, MOLOKAI, KAUAI, AND HAWAII.

4. THE ENGINEER MAY ASSESS LIQUIDATED DAMAGES OF UP TO $27,500 FOR NON-COMPLIANCE OF EACH BMP AND EACH REQUIREMENT STATED IN SECTION 209, FOR EVERY DAY OF NON-COMPLIANCE. THERE IS NO MAXIMUM LIMIT ON THE AMOUNT ASSESSED PER DAY.

5. THE ENGINEER WILL DEDUCT THE COST FROM THE PROGRESS PAYMENT FOR ALL CITATIONS RECEIVED BY THE DEPARTMENT FOR NON-COMPLIANCE, OR THE CONTRACTOR SHALL REIMBURSE THE STATE FOR THE FULL AMOUNT OF THE OUTSTANDING COST INCURRED BY THE STATE.

6. INSTALL A RAIN GAGE PRIOR TO ANY FIELD WORK INCLUDING THE INSTALLATION OF ANY SITE-SPECIFIC BEST MANAGEMENT PRACTICES. THE RAIN GAGE SHALL HAVE A TOLERANCE OF AT LEAST 0.05 INCHES OF RAINFALL, AND HAVE AN OPENING OF AT LEAST ONE-INCH IN DIAMETER INSTALL THE RAIN GAGE ON THE PROJECT SITE IN AN AREA THAT WILL NOT DETER RAINFALL FROM ENTERING THE GAGE OPENING. THE RAIN GAGE INSTALLATION SHALL BE STABLE AND PLUMBED. DO NOT BEGIN FIELD WORK UNTIL THE RAIN GAUGE IS INSTALLED AND SITE-SPECIFIC BEST MANAGEMENT PRACTICES ARE IN-PLACE. TAKE READINGS 7 DAYS A WEEK, 365 DAYS A YEAR. SUBMIT RESULTS TO THE ENGINEER EVERY WEEK.

7. WORK SHALL NOT START WITHOUT TWO (2) WEEKS WRITTEN NOTIFICATION TO THE DEPARTMENT OF HEALTH CLEAN WATER BRANCH BY HDOT. CONTRACTOR SHALL REQUEST AN NTP DATE TO TAKE INTO ACCOUNT THIS REQUIREMENT AND SHALL REQUEST A DATE THAT IS A MINIMUM OF THREE WEEKS FROM DATE OF REQUEST FOR NTP FROM ENGINEER.

B. WASTE DISPOSAL:

1. WASTE MATERIALS: ALL WASTE MATERIALS SHALL BE COLLECTED AND STORED IN A SECURELY LIDDED METAL DUMPSTER THAT DOES NOT LEAK. THE DUMPSTER SHALL MEET ALL LOCAL AND STATE SOLID WASTE MANAGEMENT REGULATIONS. ALL TRASH AND CONSTRUCTION DEBRIS FROM THE SITE SHALL BE DEPOSITED IN THE DUMPSTER. THE DUMPSTER SHALL BE EMPTIED A MINIMUM OF TWICE PER WEEK OR AS OFTEN AS IN DEEMED NECESSARY. NO CONSTRUCTION WASTE MATERIALS SHALL BE BURIED ONSITE. THE CONTRACTOR'S SUPERVISORY PERSONNEL SHALL BE INSTRUCTED REGARDING THE CORRECT PROCEDURE FOR WASTE DISPOSAL. NOTICES STATING THESE PRACTICES SHALL BE POSTED IN THE OFFICE TRAILER AND THE CONTRACTOR SHALL BE RESPONSIBLE FOR SEEING THE THESE PROCEDURES ARE FOLLOWED.

2. HAZARDOUS WASTE: ALL HAZARDOUS WASTE MATERIAL SHALL BE DISPOSED OF IN THE MANNER SPECIFIED BY LOCAL OR STATE REGULATION OR BY THE MANUFACTURER. THE CONTRACTOR'S SITE PERSONNEL SHALL BE INSTRUCTED IN THESE PRACTICES AND SHALL BE RESPONSIBLE FOR SEEING THAT THESE PRACTICES ARE FOLLOWED.

3. SANITARY WASTE: ALL SANITARY WASTE SHALL BE COLLECTED FROM THE PORTABLE UNITS A MINIMUM OF ONCE PER WEEK, OR AS REQUIRED.

C. EROSION AND SEDIMENT CONTROL INSPECTION AND MAINTENANCE PRACTICES:

1. ALL CONTROL MEASURES SHALL BE INSPECTED AT LEAST ONCE EACH WEEK AND WITHIN 24 HOURS FOLLOWING ANY RAINFALL EVENT OF 0.5 INCHES OR GREATER WITHIN A 24 HOUR PERIOD.

2. ALL MEASURES SHALL BE MAINTAINED IN GOOD WORKING ORDER. IF REPAIR IS NECESSARY, IT SHALL BE INITIATED WITHIN 24 HOURS AFTER THE INSPECTION.

3. BUILT-UP SEDIMENT SHALL BE REMOVED FROM SILT FENCE BEFORE IT HAS REACHED ONE-THIRD THE HEIGHT OF THE FENCE.

4. SILT SCREEN OR FENCE SHALL BE INSPECTED FOR DEPTH OF SEDIMENT, TEARS, TO VERIFY THAT THE FABRIC IS SECURELY ATTACHED TO THE FENCE POSTS OR CONCRETE SLAB AND TO VERIFY THAT THE FENCE POSTS ARE FIRMLY IN THE GROUND. THE BOTTOM OF THE SILT-SCREEN SHALL BE INSPECTED AND VERIFIED THAT IT IS BURIED A MINIMUM 6 INCHES BELOW THE EXISTING GROUND.

5. TEMPORARY AND PERMANENT SEEDING PLANTING SHALL BE INSPECTED FOR BARE SPOTS, WASHOUTS AND HEALTHY GROWTH.

6. A MAINTENANCE INSPECTION REPORT SHALL BE MADE PROMPTLY AFTER EACH INSPECTION BY THE CONTRACTOR AND A COPY SHALL BE SUBMITTED TO THE ENGINEER NO LATER THAN ONE WEEK FROM THE DATE OF INSPECTION.

7. PROVIDE A STABILIZED CONSTRUCTION ENTRANCE TO REDUCE VEHICLE TRACKING OF SEDIMENTS. INCLUDE STABILIZED CONSTRUCTION ENTRANCE IN THE WATER POLLUTION, DUST, AND EROSION CONTROL SUBMITTALS. MINIMUM LENGTH SHOULD BE 50 FEET. MINIMUM WIDTH SHOULD BE 30 FEET. MINIMUM DEPTH SHOULD BE 6 INCHES AND UNDERLAIN WITH GEO-TEXTILE FABRIC. THE PAVED STREET ADJACENT TO THE SITE ENTRANCE SHALL BE CLEANED DAILY OR AS REQUIRED TO REMOVE ANY EXCESS MUD, COLD PLANED MATERIALS, DIRT OR ROCK TRACKED FROM THE SITE. DUMP TRUCKS HAULING MATERIAL FROM THE CONSTRUCTION SITE SHALL BE COVERED WITH A TARPAULIN.

WATER POLLUTION AND EROSION CONTROL NOTES (Cont.)

8. INCLUDE DESIGNATED CONCRETE WASHOUT AREA(S) IN THE WATER POLLUTION, DUST, AND EROSION CONTROL SUBMITTALS.

9. THE CONTRACTOR SHALL SUBMIT THE NAME OF SPECIFIC INDIVIDUAL DESIGNATED RESPONSIBLY FOR INSPECTION, MAINTENANCE AND REPAIR ACTIVITIES AND FILLING OUT INSPECTION AND MAINTENANCE REPORT.

10. PERSONNEL SELECTED FOR THE INSPECTION AND MAINTENANCE RESPONSIBILITIES SHALL RECEIVE TRAINING FROM THE CONTRACTOR. THEY SHALL BE TRAINED IN ALL THE INSPECTION AND MAINTENANCE PRACTICES NECESSARY FOR KEEPING THE EROSION AND SEDIMENT CONTROLS USED ONSITE IN GOOD WORKING ORDER.

11. THE CONTRACTOR SHALL CONTAIN, REMOVE, AND DISPOSE SLURRY GENERATED FROM SAW CUTTING OF PAVEMENT IN ACCORDANCE WITH APPROVED BMP PRACTICES. PAYMENT FOR CONFINEMENT, REMOVAL, AND DISPOSAL OF SLURRY SHALL BE CONSIDERED INCIDENTAL TO THE VARIOUS CONTRACT ITEMS.

D. GOOD HOUSEKEEPING BEST MANAGEMENT PRACTICES:

1. MATERIALS POLLUTION PREVENTION PLAN:

A. APPLICABLE MATERIALS OR SUBSTANCES LISTED BELOW ARE EXPECTED TO BE PRESENT ONSITE DURING CONSTRUCTION. OTHER MATERIALS AND SUBSTANCES NOT LISTED BELOW SHALL BE ADDED TO THE INVENTORY OF THE CONSTRUCTION CONTRACTOR'S SITE-SPECIFIC BMP PLAN.

CONCRETE	FERTILIZERS
DETERGENT	PETROLEUM BASED PRODUCTS
PAINTS (ENAMEL FND LATEX)	CLEANING SOLVENTS
METAL STUDS	WOOD
TAR	MASONRY BLOCK

B. MATERIAL MANAGEMENT PRACTICES SHALL BE USED TO REDUCED THE RISK OF SPILLS OR OTHER ACCIDENTAL EXPOSURE OF MATERIALS AND SUBSTANCES TO STORM WATER RUNOFF. AN EFFORT SHALL BE MADE TO STORE ONLY ENOUGH PRODUCT AS IS REQUIRED TO DO THE JOB.

C. ALL MATERIALS STORED ONSITE SHALL BE STORED IN A NEAT, ORDERLY MANNER IN THEIR APPROPRIATE CONTAINERS AND IF POSSIBLE UNDER A ROOF OR OTHER ENCLOSURE.

D. PRODUCTS SHALL BE KEPT IN THEIR ORIGINAL CONTAINERS WITH THE ORIGINAL MANUFACTURER'S LABEL.

E. SUBSTANCES SHALL NOT BE MIXED WITH ONE ANOTHER UNLESS RECOMMENDED BY THE MANUFACTURER.

F. WHENEVER POSSIBLE, A PRODUCT SHALL BE USED UP COMPLETELY BEFORE DISPOSING OF THE CONTAINER.

G. MANUFACTURER'S RECOMMENDATIONS FOR PROPER USE AND DISPOSAL SHALL BE FOLLOWED.

H. THE CONTRACTOR SHALL CONDUCT A DAILY INSPECTION TO ENSURE PROPER USE AND DISPOSAL OF MATERIALS ONSITE.

2. HAZARDOUS MATERIAL POLLUTION PREVENTION PLAN

A. PRODUCTS SHALL BE KEPT IN ORIGINAL CONTAINERS UNLESS THEY ARE NOT RESEALBLE

B. ORIGINAL LABELS AND MATERIAL SAFETY DATA SHEETS (MSDS) SHALL BE RETAINED.

C. SURPLUS PRODUCTS SHALL BE DISPOSED OF ACCORDING TO MANUFACTURERS' INSTRUCTIONS OR LOCAL AND STATE RECOMMENDED METHODS.

3. ONSITE AND OFFSITE PRODUCTS SPECIFIC PLAN

THE FOLLOWING PRODUCT SPECIFIC PRACTICES SHALL BE FOLLOWED ONSITE:

A. PETROLEUM BASED PRODUCTS: ALL ONSITE VEHICLES SHALL BE MONITORED FOR LEAKS AND RECEIVE REGULAR PREVENTIVE MAINTENANCE TO REDUCE THE CHANCE OF LEAKAGE. PETROLEUM PRODUCTS SHALL BE STORED IN TIGHTLY SEALED CONTAINERS WHICH ARE CLEARLY LABELED. ANY ASPHALT SUBSTANCES USED ONSITE SHALL BE APPLIED ACCORDING TO THE MANUFACTURER'S RECOMMENDATION.

B. FERTILIZERS: FERTILIZERS USED SHALL BE APPLIED ONLY IN THE MINIMUM AMOUNTS RECOMMENDED BY THE MANUFACTURER. ONCE APPLIED, FERTILIZER SHALL BE WORKED INTO THE SOIL TO LIMIT EXPOSURE TO STORM WATER. STORAGE SHALL BE IN A COVERED SHED. THE CONTENTS OF ANY PARTIALLY USED BAGS OF FERTILIZER SHALL BE TRANSFERRED TO A SEALABLE PLASTIC BIN TO AVOID SPILLS.

C. PAINTS: ALL CONTAINERS SHALL BE TIGHTLY SEALED AND STORED WHEN NOT REQUIRED FOR USE. EXCESS PAINT SHALL NOT BE DISCHARGED TO THE HIGHWAY DRAINAGE SYSTEM BUT SHALL BE PROPERLY DISPOSED OF ACCORDING TO MANUFACTURERS' INSTRUCTIONS OR STATE AND LOCAL REGULATIONS.

D. CONCRETE TRUCKS: CONCRETE TRUCKS SHALL BE ALLOWED TO WASH OUT OR DRUM WASH WATER ONLY AT DESIGNATED SITE. WATER SHALL NOT BE DISCHARGED IN THE HIGHWAY DRAINAGE SYSTEM OR WATERS OF THE UNITED STATES (I.E. STREAMS, RIVERS, HARBORS). THE CONTRACTOR SHALL CONTACT DRINKING WATER BRANCH, DEPARTMENT OF HEALTH AT 586-4258 TO RECEIVE PERMISSION TO DESIGNATE A DISPOSAL SITE. THE CONTRACTOR SHALL CLEAN THE DISPOSAL SITE AS REQUIRED OR AS REQUESTED BY THE OWNER'S REPRESENTATIVE.

WATER POLLUTION AND EROSION CONTROL NOTES (Cont.)

4. SPILL CONTROL PLAN:

A. THE CONTRACTOR SHALL HAVE A SPILL PREVENTION PLAN WHICH SHALL BE POSTED AND ADJUSTED TO INCLUDE A DESCRIPTION AND CAUSE OF EACH SPILL, MEASURES TO PREVENT AND CLEAN UP EACH SPILL.

B. THE CONTRACTOR SHALL BE THE SPILL PREVENTION AND CLEANUP COORDINATOR. THE CONTRACTOR SHALL DESIGNATE AT LEAST THREE SITE PERSONNEL WHO SHALL RECEIVE SPILL PREVENTION AND CLEANUP TRAINING. THESE INDIVIDUALS SHALL EACH BECOME RESPONSIBLE FOR A PARTICULAR PHASE OF PREVENTION AND CLEANUP. THE NAMES OF RESPONSIBLE SPILL PERSONNEL SHALL BE POSTED IN THE MATERIAL STORAGE AREA AND IN THE OFFICE TRAILER ONSITE.

C. MANUFACTURER'S RECOMMENDED METHODS FOR SPILL CLEANUP SHALL BE CLEARLY POSTED AND SITE PERSONNEL SHALL BE MADE AWARE OF THE PROCEDURES AND THE LOCATION OF THE INFORMATION AND CLEANUP SUPPLIES.

D. MATERIALS AND EQUIPMENTS NECESSARY FOR SPILL CLEANUP SHALL BE KEPT IN THE MATERIAL STORAGE AREA ONSITE.

E. ALL SPILLS SHALL BE CLEANED UP IMMEDIATELY AFTER DISCOVERY.

F. THE SPILL AREA SHALL BE KEPT WELL VENTILATED AND PERSONNEL SHALL WEAR APPROPRIATE PROTECTIVE CLOTHING TO PREVENT INJURY FROM CONTACT WITH A HAZARDOUS SUBSTANCE.

G. SPILLS OF TOXIC HAZARDOUS MATERIALS SHALL BE REPORTED TO THE APPROPRIATE STATE OR LOCAL GOVERNMENT AGENCY, REGARDLESS OF THE SIZE.

E. PERMIT REQUIREMENTS:

1. IF A NATIONAL POLLUTANT DISCHARGE ELIMINATION SYSTEM (NPDES) PERMIT IS REQUIRED FOR CONSTRUCTION ACTIVITIES OF ONE ACRE OR MORE, THE CONTRACTOR SHALL SUBMIT TO THE ENGINEER SIX (6) SETS OF THE WATER POLLUTION AND EROSION CONTROL SUBMITTALS AS DETAILED IN SECTION 209.03 OF THE SPECIFICATIONS.

2. IF A NPDES PERMIT FOR CONSTRUCTION DEWATERING IS REQUIRED, THE CONTRACTOR SHALL BE RESPONSIBLE TO OBTAIN THE PERMIT FROM THE DEPARTMENT OF HEALTH, CLEAN WATER BRANCH.

3. THE CONTRACTOR SHALL COMPLY WITH ALL APPLICABLE STATE AND FEDERAL PERMIT CONDITIONS. PERMITS MAY INCLUDE BUT ARE NOT LIMITED TO THE FOLLOWING.

A. NPDES PERMIT FOR CONSTRUCTION ACTIVITIES.

TOPOGRAPHIC SURVEY NOTES

1. TOPOGRAPHIC FEATURES ARE BASED ON TOPOGRAPHIC MAP, JOB NO. 03002-6, DATED JANUARY 8, 2016 PREPARED BY CONTROL POINT SURVEYING, INC., 1150 SOUTH KING STREET, SUITE 1200, HONOLULU, HAWAII, 96814.

2. LOCATIONS OF UNDERGROUND UTILITIES SHOWN ARE APPROXIMATE.

3. ALL ELEVATIONS AND DISTANCES SHOWN ARE IN FEET.

4. COORDINATES AND AZIMUTHS ARE BASED ON "PUU KA PELE" TRIANGULATION STATION.

5. ELEVATIONS ARE REFERENCED TO USGS BRASS DISK "HALE 2", ELEV.=3,710.41 MSL (MEAN SEA LEVEL).

REVISION NO.	SYM.	DESCRIPTION	SHT./OF	DATE	APPROVED

JON T. MURAOKA
LICENSED PROFESSIONAL ENGINEER
No. 8843-C
HAWAII, USA

This work was prepared by me or under my supervision and construction of this project will be under my observation. Observation of construction as defined by "Hawaii Administrative Rules, Title 16, Dept. of Commerce & Consumer Affairs, Chapter 115, Professional Engineers, Architects, Surveyors and Landscape Architects."

FUKUNAGA & ASSOCIATES, INC.
License Expiration Date: April 30, 2028

STATE OF HAWAII
DEPARTMENT OF LAND AND NATURAL RESOURCES
ENGINEERING DIVISION

KOKE'E STATE PARK
ELECTRICAL IMPROVEMENTS
WAIMEA, KAUAI, HAWAII

CONSTRUCTION NOTES - 2

FUKUNAGA AND ASSOCIATES, INC

DESIGNED:	AA	SUBMITTED:	
DRAWN:	JT	DATE:	APRIL 2026
CHECKED:	JTM	SCALE:	AS SHOWN
APPROVED:	Dina Lau E-signed 2026-05-07 07:15AM HST dina.u.lau@hawaii.gov State of Hawaii Civil Engineer	DRAWING NO.	G-002
CHIEF ENGIN			

ELECTRICAL SYMBOLS

- LED STRIP FIXTURE, SURFACE CEILING MOUNTED
- LIGHT FIXTURE, CEILING MOUNTED
- PANELBOARD
- DUPLEX RECEPTACLE WITH GFCI PROTECTION, NEMA 5-20R, 125V, +18" AFF UON
- LARGE JUNCTION BOX, SIZE AS INDICATED
- LARGE JUNCTION BOX, WALL MOUNTED, SIZE AS INDICATED
- SMALL JUNCTION (OUTLET) BOX
- SMALL JUNCTION (OUTLET) BOX, WALL MOUNTED
- LARGE JUNCTION BOX, WALL MOUNTED, SIZE AS INDICATED
- ENCLOSED CIRCUIT BREAKER, +5'-6" TO TOP UON
- $ — SINGLE POLE SWITCH, 20A, 120/277V - 3=3 WAY, 4=4 WAY, D=DIMMER
- WP — WEATHERPROOF
- UON — UNLESS OTHERWISE NOTED
- CONDUIT UP
- CONDUIT DOWN
- CONDUIT & WIRING IN WALL OR CEILING
- CONDUIT & WIRING BELOW REFERENCED PLANE
- CONDUIT & WIRING EXPOSED
- HOMERUN TO APPLICABLE PANEL
- CONDUIT STUB
- FLEXIBLE CONDUIT
- NM — TYPE NM WIRING

MINIMUM CONDUIT SIZE SHALL BE 3/4".
ANY CIRCUIT WITH NO FURTHER DESIGNATION INDICATES A TWO (2) WIRE CIRCUIT. CIRCUITS WITH ADDITIONAL WIRES ARE INDICATED AS FOLLOWS: —//— 3 WIRES, —///— 4 WIRES, ETC. MINIMUM CONDUCTOR SIZE MUST BE #12. ALTHOUGH NOT INDICATED A SEPARATE GREEN GROUND CONDUCTOR SIZED PER THE N.E.C. SHALL BE INSTALLED IN ALL BRANCH CIRCUIT CONDUITS.

ONE-LINE SYMBOLS

- PANELBOARD
- MOLDED CASE CIRCUIT BREAKER
- SAFETY SWITCH - NON FUSED
- TRANSFORMER
- WHM — WATT-HOUR METER
- SPD — SURGE PROTECTIVE DEVICE
- GROUND CONNECTION

SITE ELECTRICAL SYMBOLS

- EXISTING WOOD POLE
- GUY ANCHOR
- UNDERGROUND DUCTLINE
- 2 S 4 (A) — DUCT SECTION INDICATOR

DUCT DESIGNATION

2 S 4 (A)

- A — DUCT SECTION "A" SEE DUCT SECTION DETAILS, SEE A E-501 AND E E-501
- 4 — CONDUIT SIZE
- S — SYSTEM "S" SECONDARY ELECTRIC (NORMAL)
- 2 — NUMBER OF DUCTS

GENERAL NOTES:

1. THE DRAWINGS DO NOT REFLECT ALL THE EXISTING CONDITIONS THAT MAY BE ENCOUNTERED DURING CONSTRUCTION. VISIT THE PROJECT SITE AND BECOME FAMILIAR WITH THE EXISTING CONDITIONS, THE EXTENT OF ANY DEMOLITION WORK, AND THE NEW WORK PRIOR TO THE START OF ON-SITE CONSTRUCTION ACTIVITIES. REPORT ANY DISCREPANCIES AND/OR DIFFERENCES BETWEEN THE EXISTING CONDITIONS AND THE CONSTRUCTION DOCUMENTS TO THE CONTRACTING OFFICER PRIOR TO COMMENCING CONSTRUCTION. RESOLVE ALL DISCREPANCIES AND QUESTIONS PRIOR TO THE START OF WORK.
2. EXISTING DEVICE LOCATIONS, CIRCUIT ASSIGNMENTS, WIRING CONNECTIONS, AND CONDUIT RUNS INDICATED WERE DERIVED FROM LIMITED FIELD INVESTIGATION. FIELD VERIFY ALL EXISTING CONDITIONS AND MAKE ANY NECESSARY ADJUSTMENTS TO SATISFY THE INTENT OF THE DRAWINGS AND SPECIFICATIONS.
3. OBTAIN ALL STANDARDS AND DRAWINGS RELATED TO THIS PROJECT FROM THE UTILITY COMPANIES. VERIFY THAT THE UTILITY COMPANY'S PROJECT DRAWINGS ARE THE SAME AS THE CONTRACT DRAWINGS. NOTIFY THE ENGINEER OF ANY DIFFERENCES BETWEEN THEM. IF DIFFERENCES EXIST, OBTAIN A RESOLUTION PRIOR TO PROCEEDING WITH THE WORK WHICH IS AFFECTED.
4. VERIFY AND CHECK ALL DIMENSIONS AND DETAILS ON THE CONSTRUCTION DRAWINGS AND SPECIFICATIONS FOR ANY DISCREPANCY. ANY DISCREPANCY MUST BE BROUGHT TO THE ATTENTION OF THE CONTRACTING OFFICER FOR CLARIFICATION.
5. WORK INCIDENTAL TO THE CONTRACT AND NECESSARY TO COMPLETE THE PROJECT, ALTHOUGH NOT SPECIFICALLY REFERRED TO ON THE CONTRACT DOCUMENTS, MUST BE FURNISHED AND PERFORMED BY THE CONTRACTOR.
6. THE UNDERGROUND PIPES, CABLES OR DUCTLINES KNOWN TO EXIST BY THE ENGINEER FROM HIS SEARCH OF RECORDS ARE INDICATED ON THE PLANS. LOCATION OF EXISTING UTILITY LINES SHOWN ON THE PLANS ARE APPROXIMATE. THEREFORE, NO ASSURANCE CAN BE PROVIDED THAT THE ACTUAL LOCATIONS WILL BE PRECISELY AS SHOWN ON THE CONTRACT DOCUMENTS. THE CONTRACTOR MUST VERIFY THE LOCATION AND DEPTH OF THE UTILITIES AND EXERCISE PROPER CARE IN EXCAVATING IN THE AREA. WHEREVER CONNECTIONS OF NEW UTILITIES TO EXISTING UTILITIES ARE SHOWN ON THE PLANS, THE CONTRACTOR MUST EXPOSE THE EXISTING LINES AT THE PROPOSED CONNECTIONS TO VERIFY THEIR LOCATIONS.
7. THE DEMOLITION DRAWINGS ARE INTENDED TO SHOW THE GENERAL LIMITS OF THE WORK AND DO NOT SHOW ALL THE EXISTING APPARATUS, DEVICES, LIGHT FIXTURES, EQUIPMENT CONNECTIONS, CONDUIT RUNS, ETC. DISCONNECT AND REMOVE THE ELECTRICAL APPARATUS, DEVICES, LIGHT FIXTURES, ETC. AND CONDUIT AND WIRING BACK TO ITS SOURCE. EXISTING CONCEALED WIRING TO BE REMOVED MUST BE DISCONNECTED FROM ITS SOURCE. CONDUITS EMERGING OUT OF THE FLOOR MUST BE CUT FLUSH WITH FLOOR AND HAVE THEIR OPENINGS SEALED.
8. REMOVAL OF EXISTING ELECTRICAL DISTRIBUTION SYSTEM: REMOVAL OF EXISTING ELECTRICAL DISTRIBUTION SYSTEM EQUIPMENT MUST INCLUDE EQUIPMENT'S ASSOCIATED WIRING INCLUDING CONDUCTORS, CABLES, EXPOSED CONDUIT, SURFACE METAL RACEWAYS, BOXES, FITTINGS, ETC. BACK TO EQUIPMENT'S SOURCE. UNDERGROUND CONDUITS/DUCTS NO LONGER NEEDED MAY BE ABANDONED IN PLACE.
9. RE-ROUTE ALL EXISTING CONDUIT, WIRING AND CABLING TO REMAIN WITHIN THE PROJECT AREA AS NECESSARY TO FACILITATE THE REMOVAL OF EXISTING EQUIPMENT AS WELL AS THE INSTALLATION OF ALL NEW EQUIPMENT.
10. THE LOCATION OF ALL ELECTRICAL APPARATUS AND DEVICES ARE APPROXIMATE AND BEFORE INSTALLING, STUDY THE ARCHITECTURAL, STRUCTURAL, AND MECHANICAL DETAILS AND MAKE INSTALLATION IN THE MOST LOGICAL MANNER. ANY PIECE OF EQUIPMENT/DEVICE MAY BE RELOCATED WITHIN 10' BEFORE INSTALLATION AT THE DIRECTION OF THE ENGINEER WITHOUT ADDITIONAL CHARGE TO THE OWNER.
11. ALL OPENINGS RESULTING FROM REMOVAL WORK AND NOT REUSED MUST BE SEALED.
12. ALL DISCONNECT SWITCHES MUST HAVE THE PANELBOARD AND CIRCUIT NUMBER IDENTIFIED ON THE ENCLOSURE. PROVIDE POLYESTER TYPE LABLES THAT ARE RESISTANT TO MOISTURE, EXTREME TEMPERATURES, CHEMICALS, FADING, AND UV LIGHT. LETTERS MUST NOT BE LESS THAN 0.75" HIGH.
13. DO NOT INSTALL DISSIMILAR METALS IN DIRECT CONTACT WITH EACH OTHER TO PREVENT GALVANIC CORROSION. PROVIDE APPROPRIATE BARRIERS.
14. PAINTING OF ELECTRICAL EQUIPMENT:
    a. INTERIOR LOCATIONS - PRIME AND PAINT ALL EXPOSED CONDUITS, BOXES, FITTINGS, SUPPORT CHANNELS, MOUNTING HARDWARE AND ACCESSORIES WITH TWO FINISH COATS TO MATCH THE SURFACE ON WHICH THEY ARE MOUNTED OR TO MATCH THE FINISH OF THE ADJACENT SURFACES. EQUIPMENT SURFACES/COMPONENTS WITH A FACTORY-APPLIED PAINT FINISH NEED NOT BE PAINTED.
    b. EXTERIOR LOCATIONS - PRIME ALL EXPOSED CONDUITS, BOXES, FITTINGS, SUPPORT CHANNELS, MOUNTING HARDWARE AND ACCESSORIES WITH A 2-PART EPOXY PRIMER AND FINISH WITH 2 COATS OF AN ALIPHATIC ACRYLIC URETHANE PAINT. PAINT FINISH TO MATCH THE SURFACE ON WHICH THEY ARE MOUNTED OR TO MATCH THE FINISH OF THE ADJACENT SURFACES. STAINLESS STEEL MATERIALS NEED NOT BE PAINTED.
15. THE CONTRACTOR MUST PROVIDE ADEQUATE, NON-SKID BRIDGING MATERIAL OVER TRENCHES, INCLUDING SHORING WHEN TRENCHING IN PAVEMENT AREAS TO HANDLE ALL TYPES OF VEHICULAR AND PEDESTRIAN TRAFFIC. NO TRENCH MUST BE LEFT OPEN DURING NON-WORKING HOURS OR JOB SHUTDOWN.
16. ALL EXTERIOR EQUIPMENT: JUNCTION BOXES AND DISCONNECT SWITCHES, MUST BE STAINLESS STEEL, NEMA 4X.
17. THE CONDUIT LOCATIONS INDICATED ARE SCHEMATIC. RELOCATE JUNCTION BOXES AS NECESSARY TO FACILITATE THE CONDUIT INSTALLATION AT NO ADDITIONAL COST TO THE GOVERNMENT. JUNCTION BOXES MUST REMAIN ACCESSIBLE PER NFPA 70.
18. ELECTRICAL APPARATUS AND INSTALLATION MUST BE SUITABLE FOR THE SEISMIC CATEGORY FOR THE ISLAND PER THE BUILDING CODE.
19. ALL PENETRATIONS THROUGH EXTERIOR WALLS AND ROOFS MUST BE SEALED WEATHER-TIGHT WITH UL APPROVED MATERIALS AND METHODS AND IN ACCORDANCE WITH THE IBC.
20. ALL CONDUITS ENTERING PANELS FROM THE EXTERIOR MUST BE VAPOR SEALED/DUCT SEALED TO PREVENT WATER VAPOR AND MOISTURE FROM MIGRATING INTO PANELS.
21. SEAL ALL CONDUITS ENTERING JUNCTION BOXES, ENCLOSURES, PANELBOARDS, SWITCHBOARDS, ETC. TO PREVENT INSECTS/PESTS FROM MIGRATING THROUGH THE ELECTRICAL DISTRIBUTION SYSTEM.
22. ALL RECEPTACLES, SWITCHES, AND DISCONNECT SWITCHES MUST HAVE THE PANELBOARD AND CIRCUIT NUMBER IDENTIFIED ON THE DEVICE PLATE. PROVIDE INDUSTRIAL ADHESIVE VINYL OR POLYESTER TYPE LABELS THAT ARE RESISTANT TO MOISTURE, EXTREME TEMPERATURES, CHEMICALS, AND UV LIGHT ON THE DEVICE PLATE. LETTERS MUST BE NOT LESS THAN 1/4" HIGH. PRESSURE SENSITIVE OR THERMAL TAPES NOT ALLOWED.
23. EXPOSED EXTERIOR CONDUITS SHALL BE PVC COATED GALVANIZED RIGID STEEL, STAINLESS STEEL, OR FIBERGLASS WITH A PROTECTIVE UV COATING.
24. THE CONTRACTOR, AT THEIR EXPENSE, MUST RESTORE TO THE ORIGINAL CONDITION OR BETTER ALL EXISTING FACILITIES TO REMAIN THAT ARE DAMAGED AS A RESULT OF CONSTRUCTION.
25. REPAIR AND PAINT ALL SURFACES DAMAGED BY NEW CONSTRUCTION OR EXPOSED/DAMAGED DUE TO REMOVAL OF EXISTING EQUIPMENT. COLOR TO MATCH ADJACENT SURFACES.
26. CONTRACTOR MUST TONE AREA PRIOR TO DIGGING. ANY DAMAGE TO EXISTING UNDERGROUND UTILITIES TO REMAIN RESULTING FROM FAILURE TO DO SO MUST BE REPAIRED BY THE CONTRACTOR AT NO ADDITIONAL COST TO THE PROJECT.
27. THE CONTRACTOR SHALL VISIT THE PROJECT SITE AND FAMILIARIZE HIMSELF/HERSELF WITH ALL EXISTING CONDITIONS AND THE EXTENT OF THE REMOVAL, RECONNECTION, AND NEW WORK PRIOR TO BIDDING. BID SUBMISSION SHALL BE CONSIDERED AS EVIDENCE THAT THE CONTRACTOR HAS VISITED THE SITE AND RESOLVED ALL DISCREPANCIES AND QUESTIONS AND NO EXTRA PAYMENT WILL BE AUTHORIZED FOR WORK REQUIRED BY THE CONTRACTOR'S FAILURE TO DO SO.
28. THE CONTRACTOR MUST REGRASS AND LANDSCAPE ALL UNPAVED AREAS DISTURBED BY CONSTRUCTION ACTIVITIES. AREAS MUST BE RESTORED WITH GRASS SEEDING, SPRIGS OR TURF. THE GRASS MUST BE PLANTED, FERTILIZED, WATERED AND MAINTAINED BY THE CONTRACTOR FOR 90 DAYS OR UNTIL THE GRASS IS FULLY ESTABLISHED.

ABBREVIATIONS

&	AND
@	AT
#	NUMBER
+	PLUS
A,AMPS	AMPERES
ABV	ABOVE
AC	ALTERNATING CURRENT
ADDT'L	ADDITIONAL
ADJ	ADJACENT
AFF	ABOVE FINISHED FLOOR
AFG	ABOVE FINISHED GRADE
AIC	AMPERES INTERRUPTING CAPACITY
BKR	BREAKER
BLDG	BUILDING
C	CONDUIT
CB	CIRCUIT BREAKER
CKT	CIRCUIT
CKTS	CIRCUITS
CLG	CEILING
DISC	DISCONNECT
DN	DOWN
DP	DEEP
DT	DRY-TYPE
DWG	DRAWING
DWGS	DRAWINGS
EA	EACH
ELEC	ELECTRICAL
ELEV	ELEVATION
EMT	ELECTRICAL METALLIC TUBING
ENCL	ENCLOSURE
EQPT	EQUIPMENT
EQUIP	EQUIPMENT
EXH	EXHAUST
EXST	EXISTING
EXIST	EXISTING
FDR	FEEDER
FT	FOOT/FEET
G,GND	GROUND
GALV	GALVANIZED
GFCI	GROUND FAULT CIRCUIT INTERRUPTER
GRC	GALVANIZED RIGID CONDUIT
H	HEIGHT
IC	INTERRUPTING CAPACITY
I.E.	THAT IS
IN	INCH
INFO	INFORMATION
JB	JUNCTION BOX
KCMIL	KILO CIRCULAR MILS
KIUC	KAUAI ISLAND UTILITY COOPERATIVE
KV	KILO-VOLTS
KVA	KILO-VOLT-AMPERE
KW	KILOWATT
L	LENGTH
LTG	LIGHTING
MIN	MINIMUM
MISC	MISCELLANEOUS
MT	MOUNT
MTD	MOUNTED
MTG	MOUNTING
NEC	NATIONAL ELECTRICAL CODE
NO.	NUMBER
N1	NEMA TYPE 1 ENCLOSURE
N3R	NEMA TYPE 3R ENCLOSURE
N4X	NEMA TYPE 4X ENCLOSURE
PFB	PROVISION FOR FUTURE CIRCUIT BREAKER
PH	PHASE
PNL	PANEL
PVC	POLYVINYL CHLORIDE
SEC	SECONDARY
SQ	SQUARE
SW	SWITCH
TEMP	TEMPORARY
TYP	TYPICAL
UON	UNLESS OTHERWISE NOTED
V	VOLT
VA	VOLT-AMPERE
W	WATT
W	WIDTH
WP	WEATHER-PROOF
XFMR	TRANSFORMER

BRANCH CIRCUIT WIRING GENERAL NOTE:

1. DO NOT USE A COMMON NEUTRAL FOR MULTI-WIRE BRANCH CIRCUITS. PROVIDE A DEDICATED NEUTRAL FOR EACH CIRCUIT.

REVISION NO.	SYM.	DESCRIPTION	SHT./OF	DATE	APPROVED

AARON C. HAMADA
LICENSED PROFESSIONAL ENGINEER
No. 8327-E
HAWAII, U.S.A.
#24002

MK ENGINEERS, LTD.
LICENSE EXPIRATION DATE: 4/30/28
This work was prepared by me or under my supervision and construction of this project will be under my observation. Observation of construction is defined in Section 16-115-2 of the Hawaii Administrative Rules of the Board of Professional Engineers, Architects, Surveyors and Landscape Architects of the State of Hawaii (dated 9/13/01; effective 10/26/01)
4/29/26

STATE OF HAWAII
DEPARTMENT OF LAND AND NATURAL RESOURCES
ENGINEERING DIVISION

KOKE'E STATE PARK
ELECTRICAL IMPROVEMENTS
WAIMEA, KAUAI, HAWAII

ELECTRICAL SYMBOLS, ABBREV, AND NOTES

FUKUNAGA AND ASSOCIATES, INC

DESIGNED:	ACH	SUBMITTED:	
DRAWN:	MKE	DATE:	APRIL 2026
CHECKED:	ACH	SCALE:	AS SHOWN
APPROVED:	Dina Lau E-signed 2026-05-07 07:15AM HST dina.u.lau@hawaii.gov State of Hawaii Civil Engineer	DRAWING NO.	E-001
CHIEF ENGIN			

C:\Users\dipyr\OneDrive - MK Engineers Ltd\02F_CAD_24-25 - Documents\2024\24002_KokeeStatePk_ElecSvcMod\01_dwg\24002_E001_sym.dwg, Layout1, 5/1/2026 10:50:17 AM, dipyr, 1:1

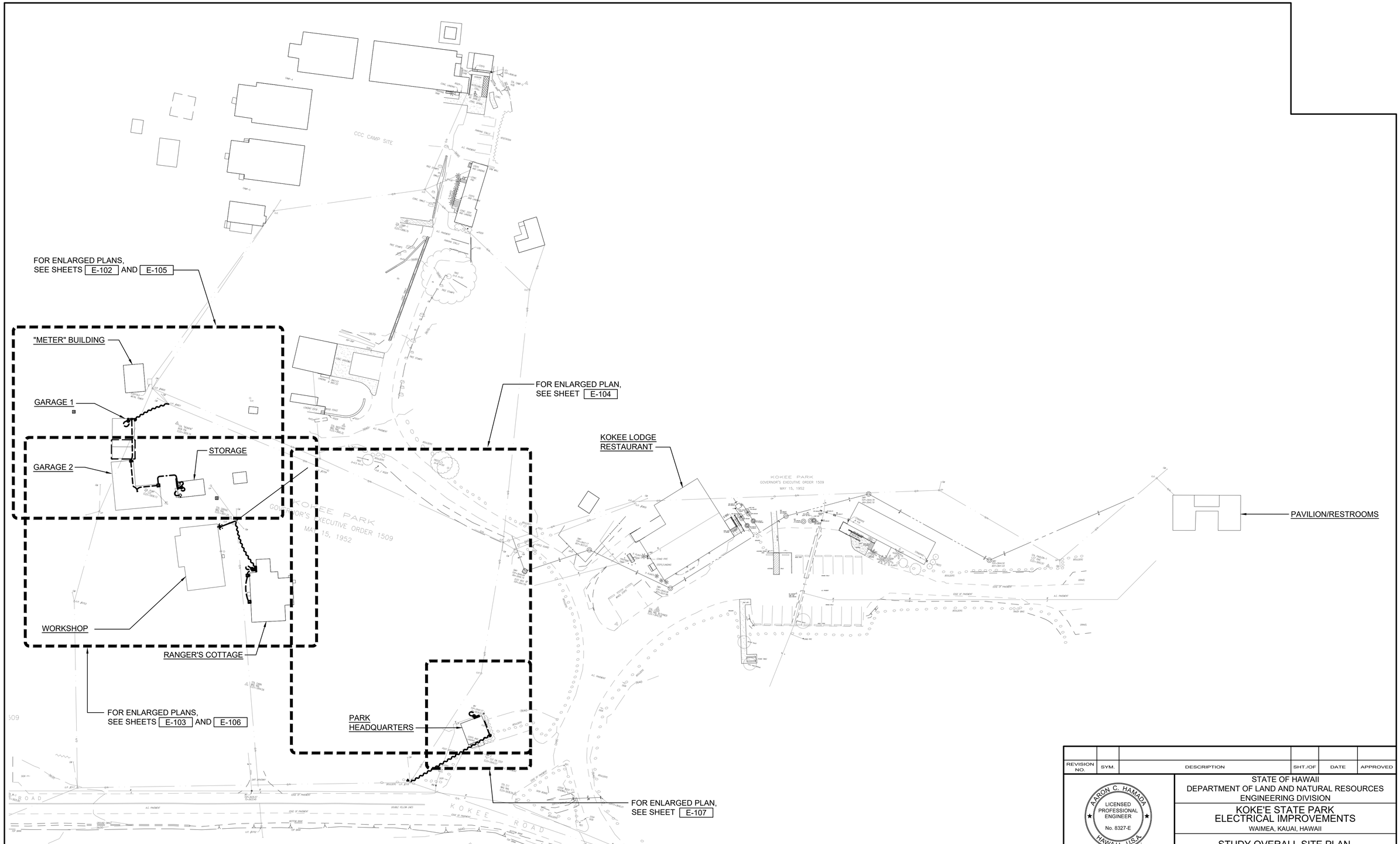

1 OVERALL SITE PLAN

SCALE: 1" = 10'-0"

REVISION NO.	SYM.	DESCRIPTION	SHT./OF	DATE	APPROVED

AARON C. HAMADA
LICENSED PROFESSIONAL ENGINEER
No. 8327-E
HAWAII, U.S.A.
#24002

MK ENGINEERS, LTD.
LICENSE EXPIRATION DATE: 4/30/28
This work was prepared by me or under my supervision and construction of this project will be under my observation. Observation of construction is defined in Section 16-115-2 of the Hawaii Administrative Rules of the Board of Professional Engineers, Architects, Surveyors and Landscape Architects of the State of Hawaii (dated 9/13/01; effective 10/26/01)

4/29/26

STATE OF HAWAII
DEPARTMENT OF LAND AND NATURAL RESOURCES
ENGINEERING DIVISION

KOKE'E STATE PARK
ELECTRICAL IMPROVEMENTS
WAIMEA, KAUAI, HAWAII

STUDY OVERALL SITE PLAN

FUKUNAGA AND ASSOCIATES, INC

DESIGNED:	ACH	SUBMITTED:	
DRAWN:	MKE	DATE:	APRIL 2026
CHECKED:	ACH	SCALE:	AS SHOWN
APPROVED:	Dina Lau E-signed 2026-05-07 07:15AM HST dina.u.lau@hawaii.gov State of Hawaii Civil Engineer	DRAWING NO.	E-101
CHIEF ENGIN			

JOB NO. F46C602F

SHEET NO. 5 OF 21 SHEETS

C:\Users\dyn\OneDrive - MK Engineers LLP\02_CAD_24-25 - Documents\2024\24002_KokeeStatePk_ElecSh\Acad\01_dwg\24002_E101_site.dwg, layout1, 5/1/2026 10:50:19 AM, dyn, 1:1

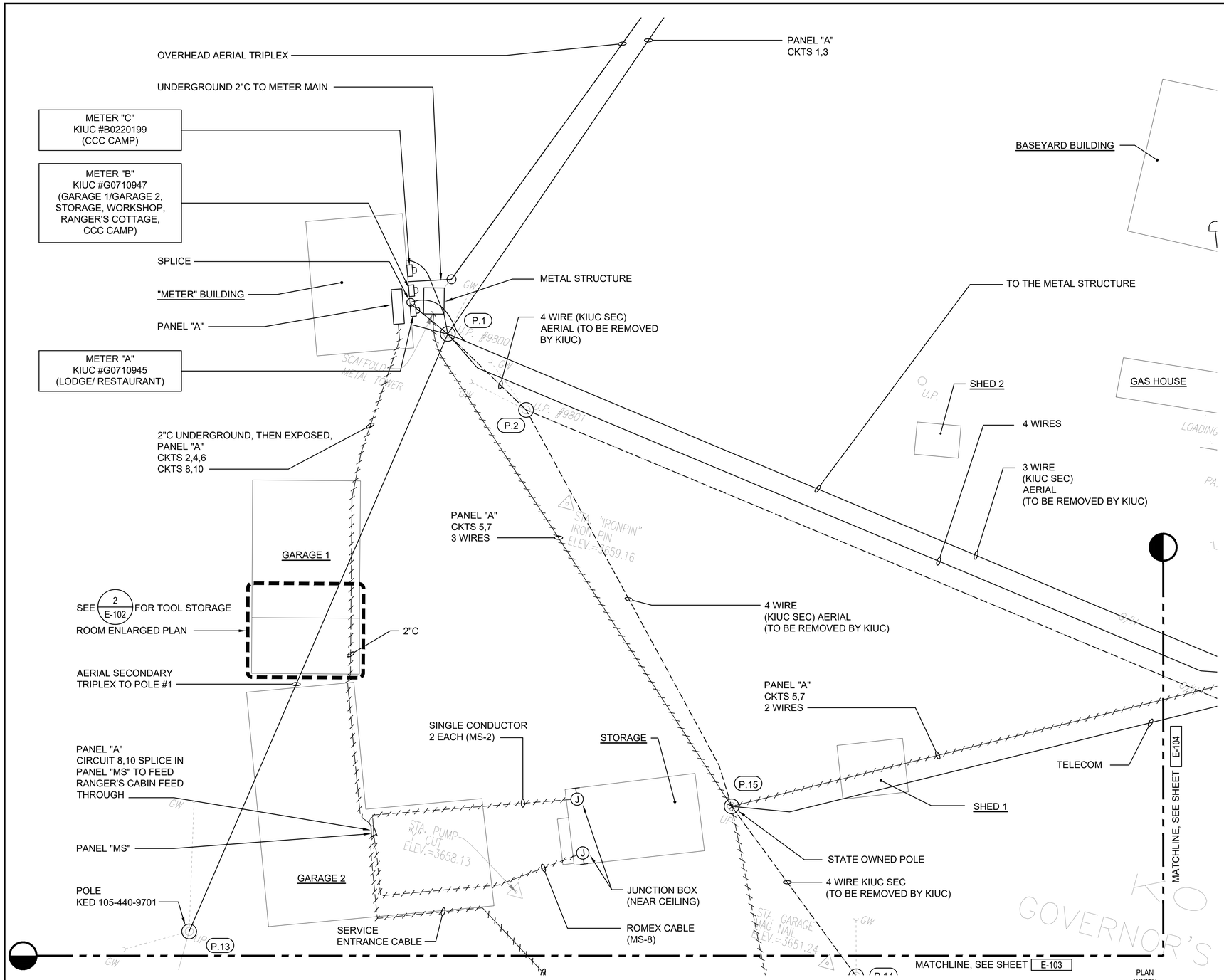

1 ELECTRICAL DEMO PLAN A (GARAGES AND STORAGE)

SCALE: 1" = 10'-0"

NOTES:

1. ———— LIGHT LINES DENOTE EXISTING CONDITION
   ////////// "/" DENOTES REMOVAL WORK
   ——R—— "R" DENOTES REMOVAL OF EXISTING CONDUCTORS FROM EXISTING CONDUIT. CONDUIT TO BE REUSED.
2. [2] INTERCEPT EXISTING CONDUIT AND CONDUCTORS WITH NEW WIREWAY.
3. CONTRACTOR IS RESPONSIBLE FOR DISPOSAL OF ITEMS TO BE REMOVED. FOR UNDERGROUND/BURIED CONDUIT/DUCT, REMOVE CONDUCTORS AND ABANDON CONDUIT/DUCT IN PLACE.

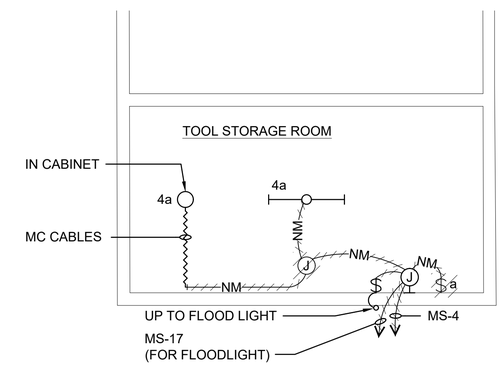

2 TOOL STORAGE ROOM ENLARGED DEMOLITION PLAN

SCALE: 1/4" = 1'-0"

PLAN NORTH

0 2' 4' 8'
1/4" = 1'

NOTES:

1. ———— LIGHT LINES DENOTE EXISTING CONDITION
   ////////// "/" DENOTES REMOVAL WORK

REVISION NO.	SYM.	DESCRIPTION	SHT./OF	DATE	APPROVED

AARON C. HAMADA
LICENSED PROFESSIONAL ENGINEER
No. 8327-E
HAWAII, U.S.A.
#24002

MK ENGINEERS, LTD.
LICENSE EXPIRATION DATE: 4/30/28
This work was prepared by me or under my supervision and construction of this project will be under my observation. Observation of construction is defined in Section 16-115-2 of the Hawaii Administrative Rules of the Board of Professional Engineers, Architects, Surveyors and Landscape Architects of the State of Hawaii (dated 9/13/01; effective 10/26/01)

4/29/26

STATE OF HAWAII
DEPARTMENT OF LAND AND NATURAL RESOURCES
ENGINEERING DIVISION

KOKE'E STATE PARK
ELECTRICAL IMPROVEMENTS
WAIMEA, KAUAI, HAWAII

ELECTRICAL DEMO PLAN A (GARAGES AND STORAGE)

FUKUNAGA AND ASSOCIATES, INC

DESIGNED:	ACH	SUBMITTED:	
DRAWN:	MKE	DATE:	APRIL 2026
CHECKED:	ACH	SCALE:	AS SHOWN
APPROVED:	Dina Lau E-signed 2026-05-07 07:15AM HST dina.u.lau@hawaii.gov State of Hawaii Civil Engineer	DRAWING NO.	E-102
CHIEF ENGIN			

JOB NO. F46C602F SHEET NO. 6 OF 21 SHEETS

C:\Users\dejyn\OneDrive - MK Engineers Ltd\02_CAD_24-25 - Documents\2024\24002_KokeeStatePk_ElecSvc\Models\01_dwg\24002_E102_LMEExDemoA.dwg, Layout1, 5/7/2026 10:30:39 AM, dejyn, 1:1

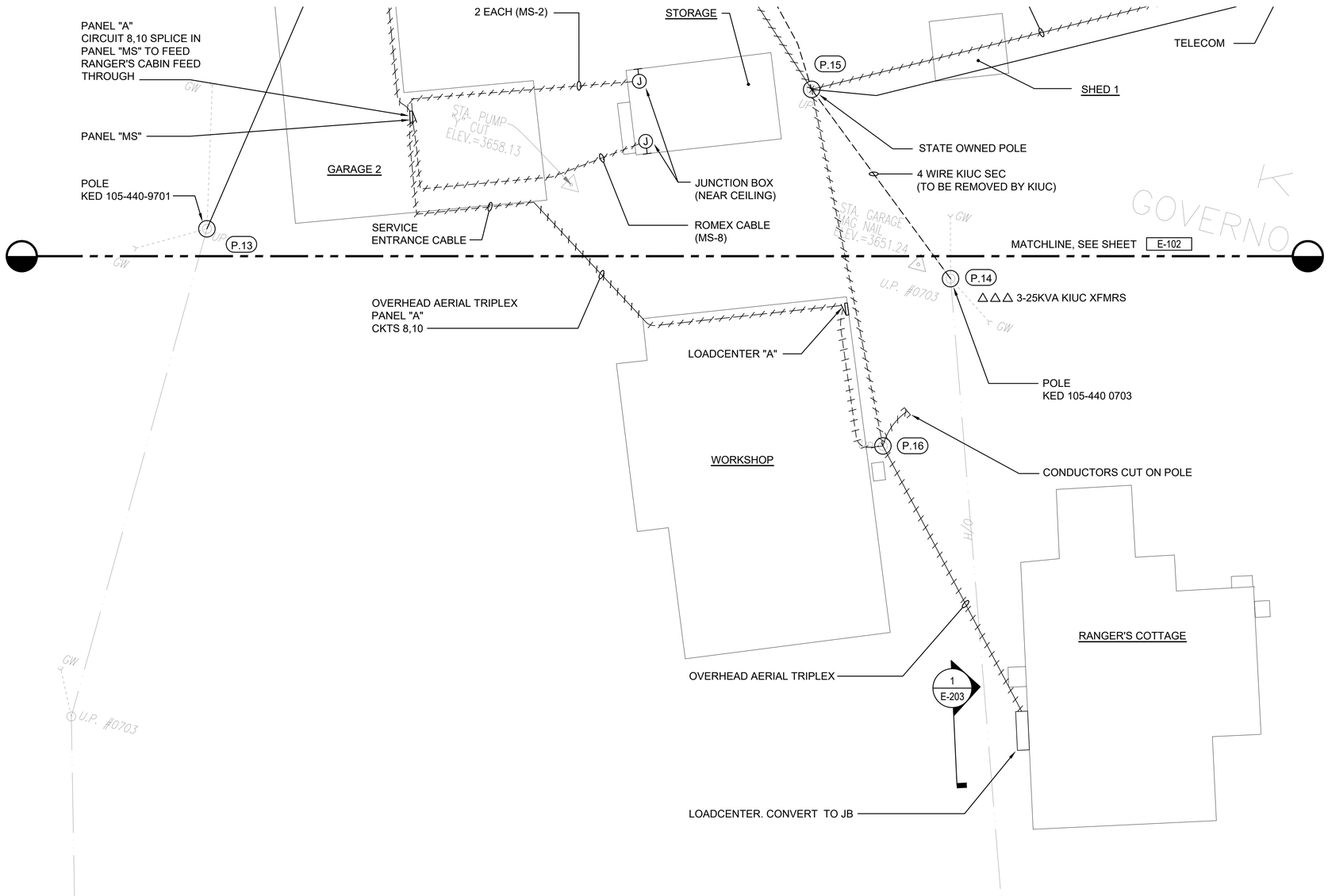

1 ELECTRICAL DEMO PLAN B (WORKSHOP AND RANGER'S COTTAGE)

SCALE: 1" = 10'-0"

PLAN NORTH

0 10' 20'
1" = 10'

NOTES:

1. ———— LIGHT LINES DENOTE EXISTING CONDITION
   /////////// "/" DENOTES REMOVAL WORK
   ——R—— "R" DENOTES REMOVAL OF EXISTING CONDUCTORS FROM EXISTING CONDUIT. CONDUIT TO BE REUSED.
2. INTERCEPT EXISTING CONDUIT AND CONDUCTORS WITH NEW WIREWAY.
3. CONTRACTOR IS RESPONSIBLE FOR DISPOSAL OF ITEMS TO BE REMOVED.

REVISION NO.	SYM.	DESCRIPTION	SHT./OF	DATE	APPROVED

AARON C. HAMADA
LICENSED PROFESSIONAL ENGINEER
No. 8327-E
HAWAII, U.S.A.
#24002

MK ENGINEERS, LTD.
LICENSE EXPIRATION DATE: 4/30/28
This work was prepared by me or under my supervision and construction of this project will be under my observation. Observation of construction is defined in Section 16-115-2 of the Hawaii Administrative Rules of the Board of Professional Engineers, Architects, Surveyors and Landscape Architects of the State of Hawaii (dated 9/13/01; effective 10/26/01)
4/29/26

STATE OF HAWAII
DEPARTMENT OF LAND AND NATURAL RESOURCES
ENGINEERING DIVISION

KOKE'E STATE PARK
ELECTRICAL IMPROVEMENTS
WAIMEA, KAUAI, HAWAII

ELECTRICAL DEMO PLAN B (WORKSHOP AND RANGER'S COTTAGE)

FUKUNAGA AND ASSOCIATES, INC

DESIGNED:	ACH	SUBMITTED:	
DRAWN:	MKE	DATE:	APRIL 2026
CHECKED:	ACH	SCALE:	AS SHOWN
APPROVED:	Dina Lau E-signed 2026-05-07 07:15AM HST dina.u.lau@hawaii.gov State of Hawaii Civil Engineer	DRAWING NO.	E-103
CHIEF ENGIN			

JOB NO. F46C602F SHEET NO. 7 OF 21 SHEETS

C:\Users\dylyn\OneDrive - MK Engineers Ltd\02F_CAD_24-25 - Documents\2024\24002_KokeeStatePk_ElecSvcModsD\1_dwg\24002_E103_sMEIExcDemoB.dwg, Layout1, 5/12/2026 10:50:37 AM, dylyn, 1:1

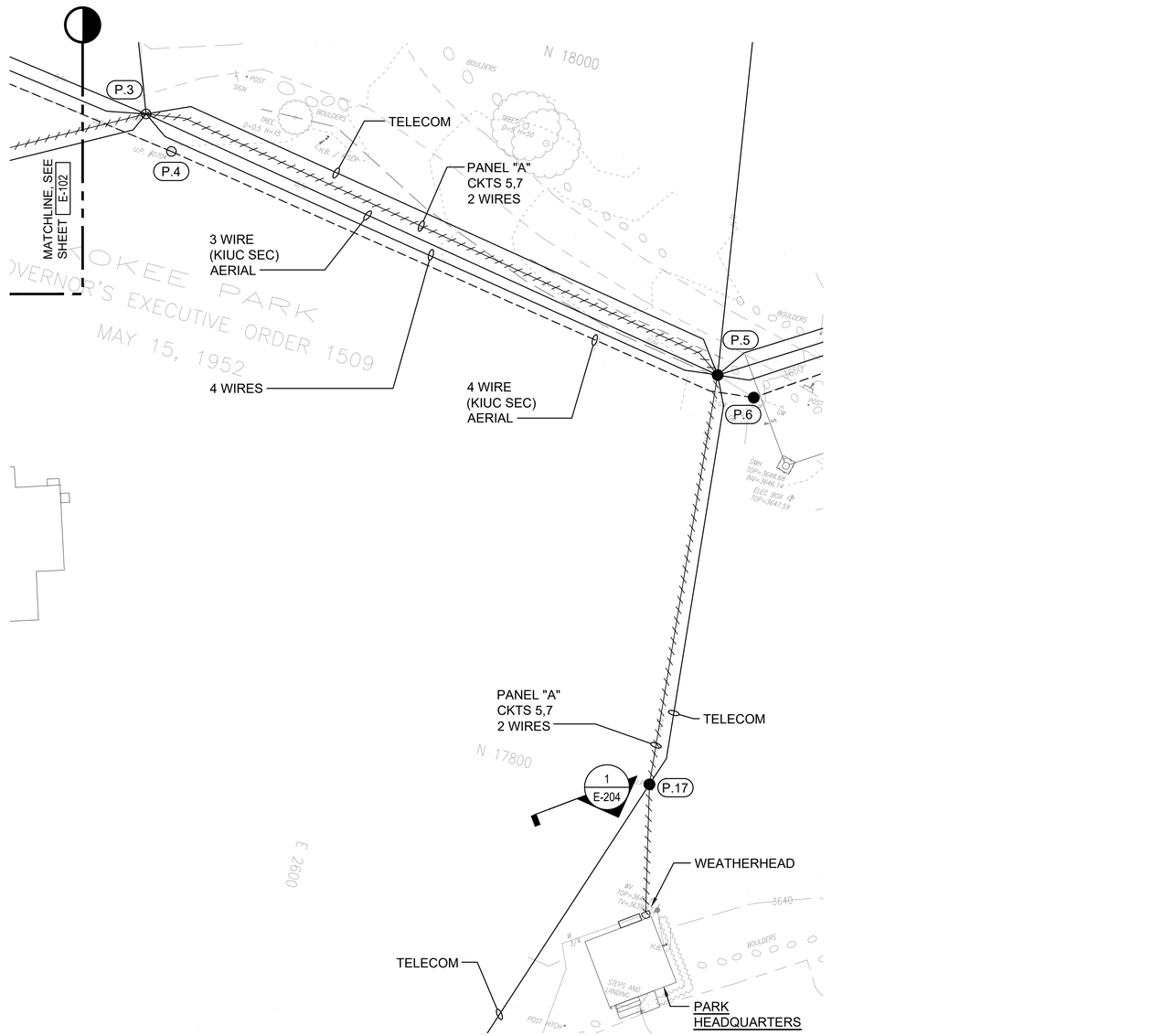

1 ELECTRICAL DEMO PLAN C (PARK HEADQUARTERS)

SCALE: 1" = 20'-0"

NOTES:

1. ———— LIGHT LINES DENOTE EXISTING CONDITION

   /////////// "/" DENOTES REMOVAL WORK

2. CONTRACTOR IS RESPONSIBLE FOR DISPOSAL OF ITEMS TO BE REMOVED.

REVISION NO.	SYM.	DESCRIPTION	SHT./OF	DATE	APPROVED

AARON C. HAMADA
LICENSED PROFESSIONAL ENGINEER
No. 8327-E
HAWAII, U.S.A.
#24002

MK ENGINEERS, LTD.
LICENSE EXPIRATION DATE: 4/30/28
This work was prepared by me or under my supervision and construction of this project will be under my observation. Observation of construction is defined in Section 16-115-2 of the Hawaii Administrative Rules of the Board of Professional Engineers, Architects, Surveyors and Landscape Architects of the State of Hawaii (dated 9/13/01; effective 10/26/01)

4/29/26

STATE OF HAWAII
DEPARTMENT OF LAND AND NATURAL RESOURCES
ENGINEERING DIVISION

KOKE'E STATE PARK
ELECTRICAL IMPROVEMENTS
WAIMEA, KAUAI, HAWAII

ELECTRICAL DEMO PLAN C (PARK HEADQUARTERS)

FUKUNAGA AND ASSOCIATES, INC

DESIGNED:	ACH	SUBMITTED:	
DRAWN:	MKE	DATE:	APRIL 2026
CHECKED:	ACH	SCALE:	AS SHOWN
APPROVED:	Dina Lau E-signed 2026-05-07 07:15AM HST dina.u.lau@hawaii.gov State of Hawaii Civil Engineer	DRAWING NO.	E-104
CHIEF ENGIN			

JOB NO. F46C602F SHEET NO. 8 OF 21 SHEETS

C:\Users\dejon\OneDrive - MK Engineers LLB\05_CAD_24-25 - Documents\2024\24002_KokeeStatePk_ElecSvc\Models\01_dwg\24002_E104_LMEBlockDemoC.dwg, Layout1, 5/7/2026 10:50:39 AM, dejon, 1:1

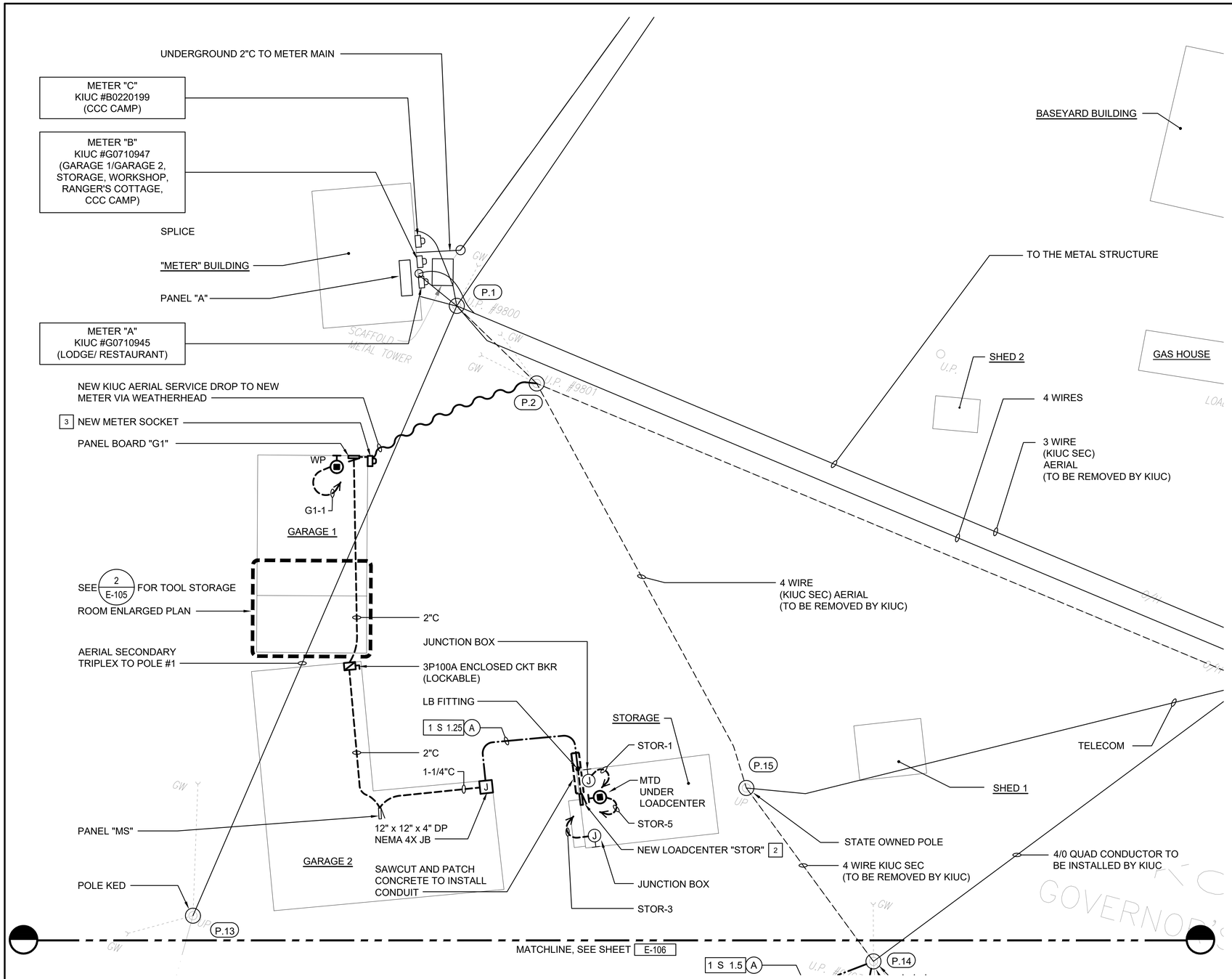

1 ELECTRICAL PLAN A (GARAGES AND STORAGE)

SCALE: 1" = 10'-0"

NOTES:

1. ——— LIGHT LINES DENOTE EXISTING CONDITION
   ——— BOLD LINES DENOTE NEW WORK

2 REPLACE EXISTING PARTICLE BOARD ON WALL WHERE LOADCENTER TO BE MOUNTED WITH PAINTED TREATED PLYWOOD. PROVIDE ADDITIONAL BRACING AS REQUIRED.

3 PROVIDE NECESSARY SUPPORT TO MOUNT METER SOCKET. LEFT EDGE OF METER SOCKET MUST NOT ENCROACH ON GARAGE OPENING.

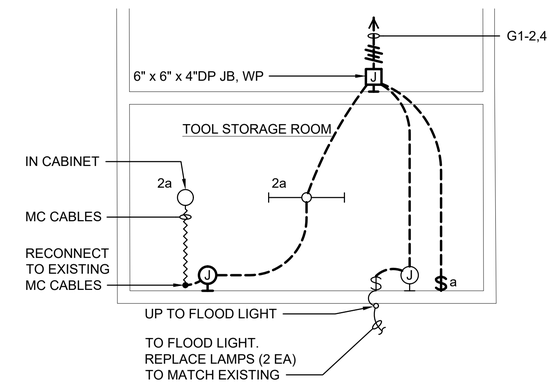

2 TOOL STORAGE ROOM ENLARGED PLAN

SCALE: 1/4" = 1'-0"

PLAN NORTH

0 2' 4' 8'
1/4" = 1'

NOTES:

1. ——— LIGHT LINES DENOTE EXISTING CONDITION
   ——— BOLD LINES DENOTE NEW WORK

REVISION NO.	SYM.	DESCRIPTION	SHT./OF	DATE	APPROVED

AARON C. HAMADA
LICENSED PROFESSIONAL ENGINEER
No. 8327-E
HAWAII, U.S.A.
#24-002

MK ENGINEERS, LTD.
LICENSE EXPIRATION DATE: 4/30/28
This work was prepared by me or under my supervision and construction of this project will be under my observation. Observation of construction is defined in Section 16-115-2 of the Hawaii Administrative Rules of the Board of Professional Engineers, Architects, Surveyors and Landscape Architects of the State of Hawaii (dated 9/13/01, effective 10/26/01)
4/29/26

STATE OF HAWAII
DEPARTMENT OF LAND AND NATURAL RESOURCES
ENGINEERING DIVISION

KOKE'E STATE PARK
ELECTRICAL IMPROVEMENTS
WAIMEA, KAUAI, HAWAII

ELECTRICAL PLAN A (GARAGES AND STORAGE)

FUKUNAGA AND ASSOCIATES, INC

DESIGNED:	ACH	SUBMITTED:	
DRAWN:	MKE	DATE:	APRIL 2026
CHECKED:	ACH	SCALE:	AS SHOWN
APPROVED:	Dina Lau E-signed 2026-05-07 07:15AM HST dina.u.lau@hawaii.gov State of Hawaii Civil Engineer	DRAWING NO.	E-105
CHIEF ENGIN			

JOB NO. F46C602F SHEET NO. 9 OF 21 SHEETS

C:\Users\dylyn\OneDrive - MK Engineers Ltd\02F_CAD_24-25 - Documents\2024\24002_KokeeStatePk_ElecSvcModd\01_dwg\24002_E105_FAE\ElecA.dwg, Layout1, 5/12/2026 10:50:41 AM, dlyn, 1:1

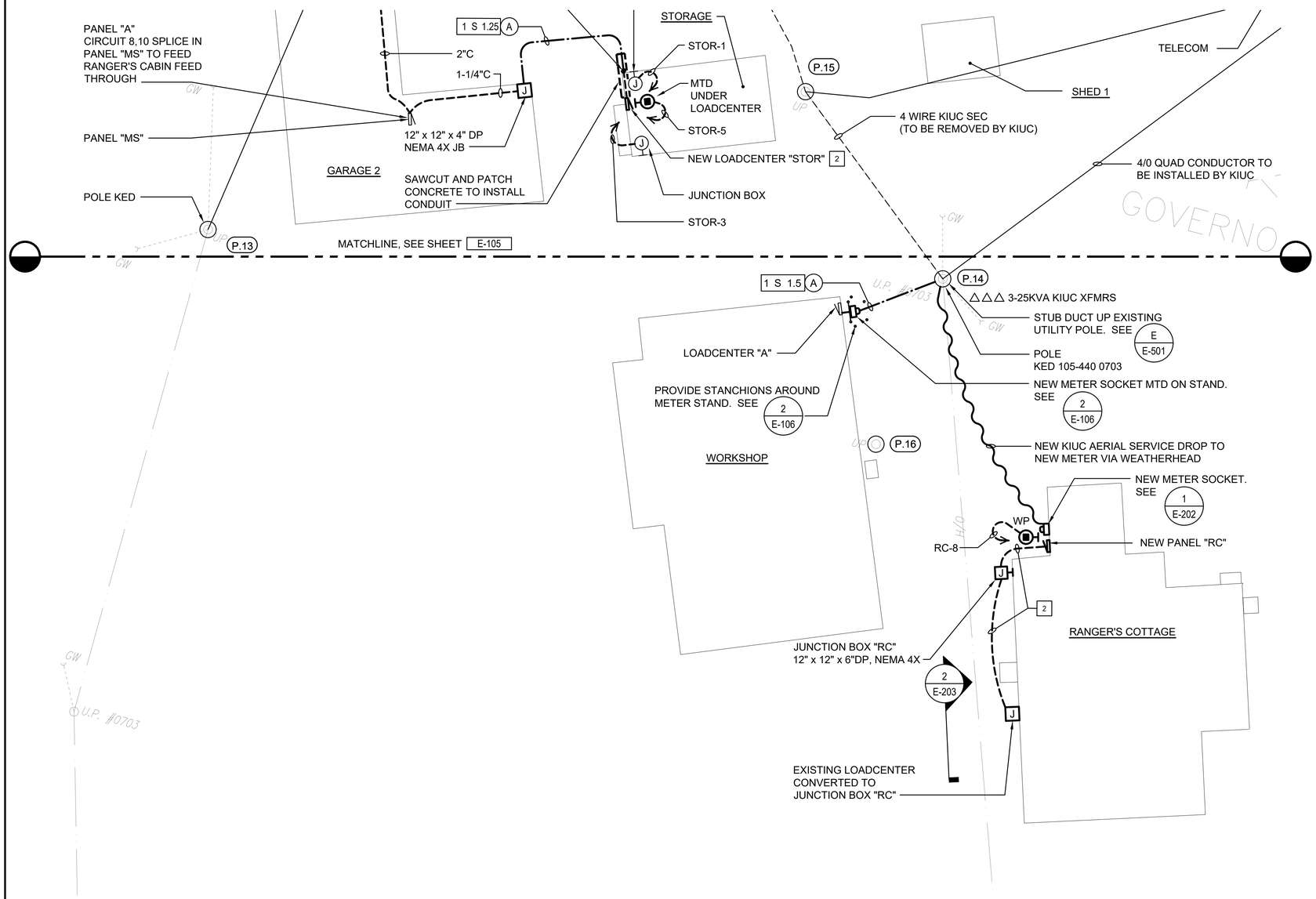

1 ELECTRICAL PLAN B (WORKSHOP AND RANGER'S COTTAGE)

SCALE: 1" = 10'-0"

PLAN NORTH

0 10' 20'
1" = 10'

NOTES:

1. ——— LIGHT LINES DENOTE EXISTING CONDITION
   ——— BOLD LINES DENOTE NEW WORK

2 SEE ONE-LINE DIAGRAM FOR ADDITIONAL INFORMATION.

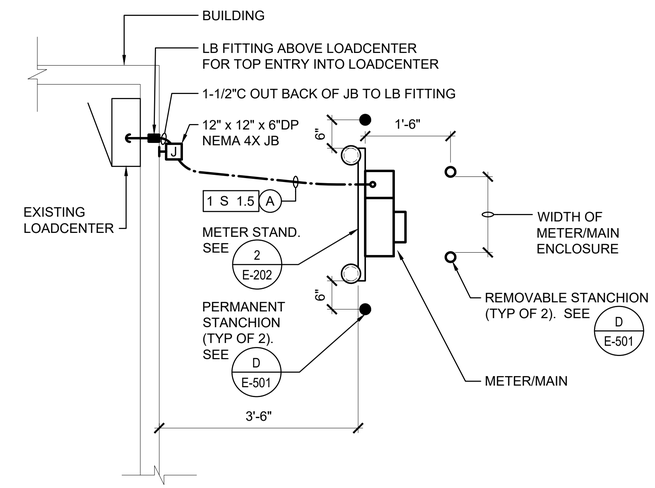

2 WORKSHOP METER ENLARGED PLAN

SCALE: 3/4" = 1'-0"

PLAN NORTH

0 1' 2' 3'
3/4" = 1'

NOTES:

1. ——— LIGHT LINES DENOTE EXISTING CONDITION
   ——— BOLD LINES DENOTE NEW WORK

REVISION NO.	SYM.	DESCRIPTION	SHT./OF	DATE	APPROVED

AARON C. HAMADA
LICENSED PROFESSIONAL ENGINEER
No. 8327-E
HAWAII, U.S.A.
#24002

MK ENGINEERS, LTD.
LICENSE EXPIRATION DATE: 4/30/28
This work was prepared by me or under my supervision and construction of this project will be under my observation. Observation of construction is defined in Section 16-115-2 of the Hawaii Administrative Rules of the Board of Professional Engineers, Architects, Surveyors and Landscape Architects of the State of Hawaii (dated 9/13/01; effective 10/26/01)
4/29/26

STATE OF HAWAII
DEPARTMENT OF LAND AND NATURAL RESOURCES
ENGINEERING DIVISION

KOKE'E STATE PARK
ELECTRICAL IMPROVEMENTS
WAIMEA, KAUAI, HAWAII

ELECTRICAL PLAN B (WORKSHOP AND RANGER'S COTTAGE)

FUKUNAGA AND ASSOCIATES, INC

DESIGNED:	ACH	SUBMITTED:	
DRAWN:	MKE	DATE:	APRIL 2026
CHECKED:	ACH	SCALE:	AS SHOWN
APPROVED:	Dina Lau E-signed 2026-05-07 07:15AM HST dina.u.lau@hawaii.gov State of Hawaii Civil Engineer	DRAWING NO.	E-106
CHIEF ENGIN			

JOB NO. F46C602F SHEET NO. 10 OF 21 SHEETS

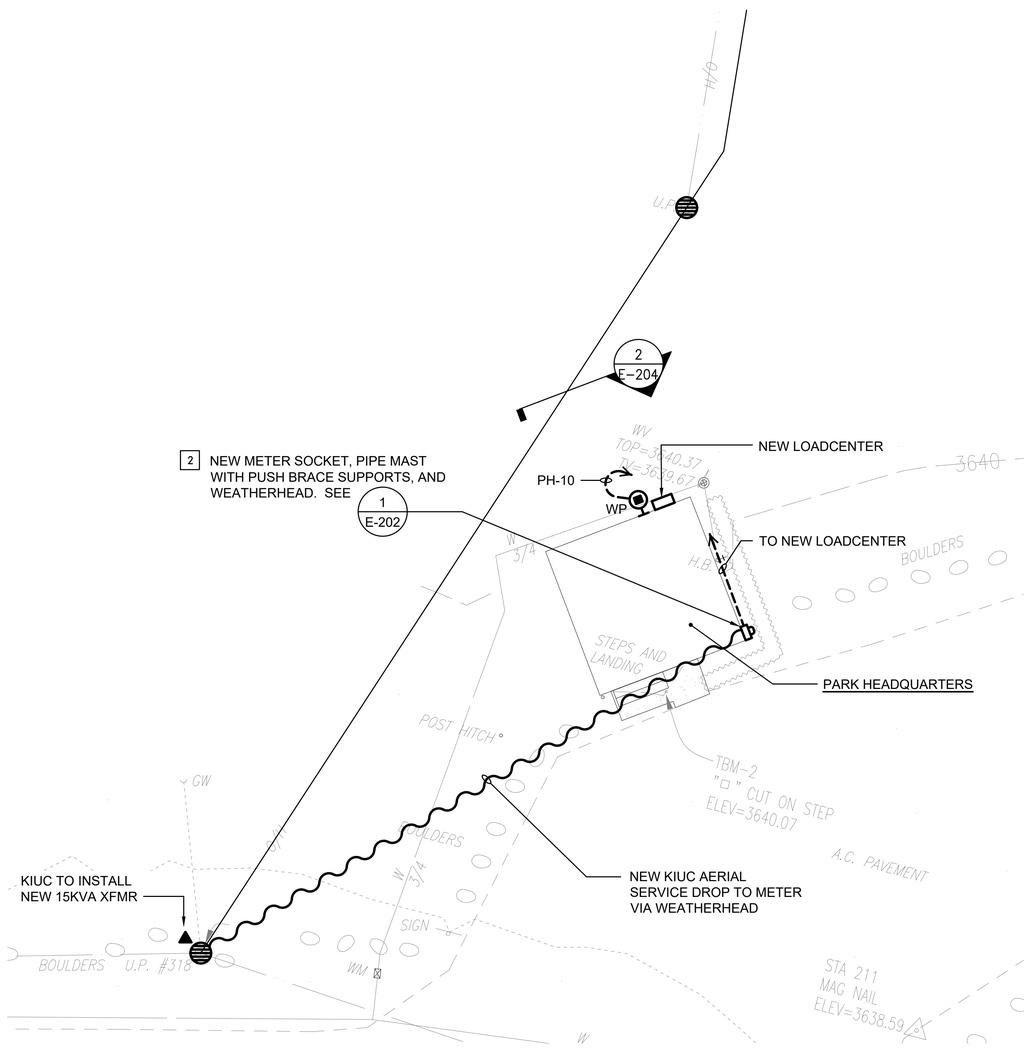

1 ELECTRICAL PLAN C (PARK HEADQUARTERS)

SCALE: 1" = 10'-0"

NOTES:

1. LIGHT LINES DENOTE EXISTING CONDITION
   BOLD LINES DENOTE NEW WORK

2 COORDINATE PIPE MAST AND WEATHERHEAD SUPPORT WITH KIUC.

REVISION NO.	SYM.	DESCRIPTION	SHT./OF	DATE	APPROVED

AARON C. HAMADA
LICENSED PROFESSIONAL ENGINEER
No. 8327-E
HAWAII, U.S.A.
#24002

MK ENGINEERS, LTD.
LICENSE EXPIRATION DATE: 4/30/28
This work was prepared by me or under my supervision and construction of this project will be under my observation. Observation of construction is defined in Section 16-115-2 of the Hawaii Administrative Rules of the Board of Professional Engineers, Architects, Surveyors and Landscape Architects of the State of Hawaii (dated 9/13/01; effective 10/26/01)

4/29/26

STATE OF HAWAII
DEPARTMENT OF LAND AND NATURAL RESOURCES
ENGINEERING DIVISION

KOKE'E STATE PARK
ELECTRICAL IMPROVEMENTS
WAIMEA, KAUAI, HAWAII

ELECTRICAL PLAN C (PARK HEADQUARTERS)

FUKUNAGA AND ASSOCIATES, INC

DESIGNED:	ACH	SUBMITTED:	
DRAWN:	MKE	DATE:	APRIL 2026
CHECKED:	ACH	SCALE:	AS SHOWN
APPROVED:	Dina Lau E-signed 2026-05-07 07:15AM HST dina.u.lau@hawaii.gov State of Hawaii Civil Engineer	DRAWING NO.	E-107
CHIEF ENGIN			

JOB NO. F46C602F

SHEET NO. 11 OF 21 SHEETS

C:\Users\dayn\OneDrive - MK Engineers LLP\02_CAD_24-25 - Documents\2024\24002_KokeeState\Ph_Elec\KoKeeSt\E-107_stateElecD.dwg, Layout1, 5/7/2026 10:50:47 AM, dayn, 1:1

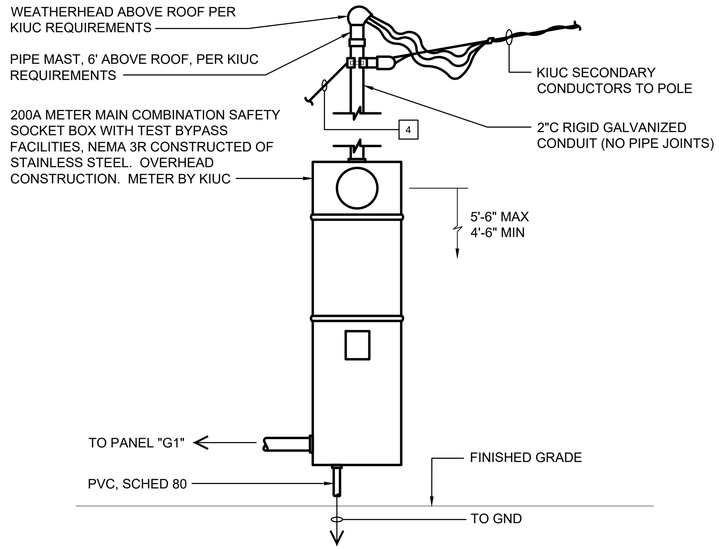

1 METER/SERVICE ENTRANCE ELEVATION - GARAGE 1

SCALE: 1" = 1'-0"

0 1/2" 1' 2'
1" = 1'

NOTES:

1. LIGHT LINES DENOTE EXISTING CONDITION
   BOLD LINES DENOTE NEW WORK
   "/" DENOTES REMOVAL WORK
2. CIRCUIT BREAKER AND DISCONNECT SHALL BE NEMA 4X.
3. METER SOCKET/METER MUST BE ACCESSIBLE AT ALL TIMES.

4 GUY TO ROOF. SEE KIUC DETAIL 2/E-202 FOR ADDITIONAL INFORMATION.

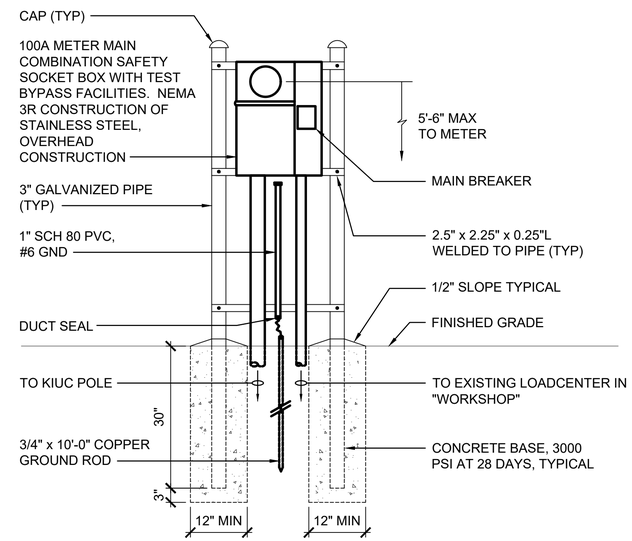

2 METER/SERVICE ENTRANCE ELEVATION - WORKSHOP

SCALE: NTS

NOTES:

1. PEDESTAL SHALL BE HOT DIPPED GALVANIZED AFTER FABRICATION.
2. ALL FASTENING BOLTS, NUTS, AND WASHERS SHALL BE STAINLESS STEEL.
3. SERVICE EQUIPMENT SHALL BE INSTALLED IN ACCORDANCE WITH KIUC REQUIREMENTS.
4. PROVIDE A MINIMUM OF 4 FEET OF CLEAR AND LEVEL WORKSPACE CLEARANCE IN FRONT OF METERING AND SERVICE EQUIPMENT.
5. PROVIDE PLASTIC METER SOCKET COVER AND BAND FOR ALL BLANK METER SOCKETS. LABEL PLASTIC COVER WITH CONTRACTOR'S NAME AND NUMBER SO COVER CAN BE RETURNED AFTER METER INSTALLATION.
6. PROVIDE A PERMANENT PHENOLIC NAMEPLATE (BLACK WITH WHITE LETTERS) FOR ALL METER SOCKETS TO IDENTIFY THE ADDRESS, UNIT, SPACE, AREA OR LOAD SERVED (E.G. "WORKSHOP").
7. THE GROUNDING ELECTRODE CONDUCTOR SHALL NOT PASS THROUGH KIUC'S SEALABLE SECTIONS OR COMPARTMENTS.

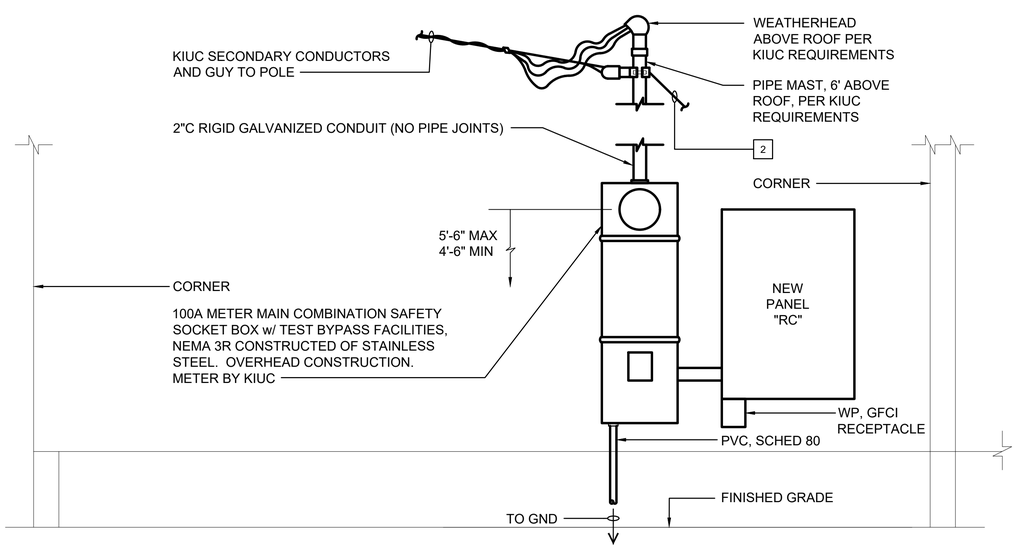

3 METER/SERVICE ENTRANCE ELEVATION - RANGER'S COTTAGE

SCALE: 1" = 1'-0"

0 1/2" 1' 2'
1" = 1'

NOTES:

1. LIGHT LINES DENOTE EXISTING CONDITION
   BOLD LINES DENOTE NEW WORK
   "/" DENOTES REMOVAL WORK

2 GUY TO ROOF. SEE KIUC DETAIL 2/E-202 FOR ADDITIONAL INFORMATION.

REVISION NO.	SYM.	DESCRIPTION	SHT./OF	DATE	APPROVED

AARON C. HAMADA
LICENSED PROFESSIONAL ENGINEER
No. 8327-E
HAWAII, U.S.A.
#24002

MK ENGINEERS, LTD.
LICENSE EXPIRATION DATE: 4/30/28
This work was prepared by me or under my supervision and construction of this project will be under my observation. Observation of construction is defined in Section 16-115-2 of the Hawaii Administrative Rules of the Board of Professional Engineers, Architects, Surveyors and Landscape Architects of the State of Hawaii (dated 9/13/01, effective 10/26/01)
4/29/26

STATE OF HAWAII
DEPARTMENT OF LAND AND NATURAL RESOURCES
ENGINEERING DIVISION

KOKE'E STATE PARK
ELECTRICAL IMPROVEMENTS
WAIMEA, KAUAI, HAWAII

METERING ELEVATION - 1

FUKUNAGA AND ASSOCIATES, INC

DESIGNED:	ACH	SUBMITTED:	
DRAWN:	MKE	DATE:	APRIL 2026
CHECKED:	ACH	SCALE:	AS SHOWN
APPROVED:	Dina Lau E-signed 2026-05-07 07:15AM HST dina.u.lau@hawaii.gov State of Hawaii Civil Engineer	DRAWING NO.	E-201
CHIEF ENGIN			

JOB NO. F46C602F

SHEET NO. 12 OF 21 SHEETS

C:\Users\dayn\OneDrive - MK Engineers Ltd\02_CAD_24-25 - Documents\2024\24002_KokeeStatePk_ElecSvcRoofs\01_dwg\24002_E201_EL\MAINTENANCE\1.dwg, Layout1, 5/1/2026 10:00:48 AM, dayn, 1:1

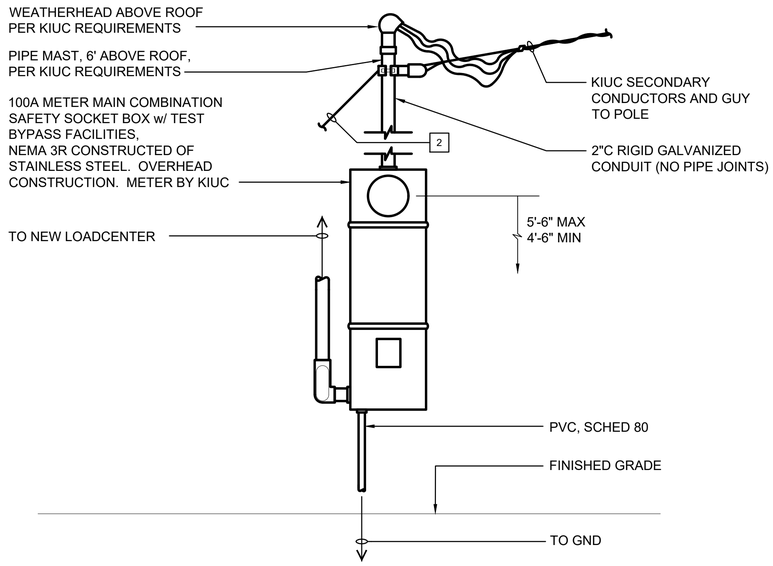

1 METER/SERVICE ENTRANCE ELEVATION - PARK HEADQUARTERS

SCALE: 1" = 1'-0"

0 1/2" 1' 2'
1" = 1'

NOTES:

1. LIGHT LINES DENOTE EXISTING CONDITION
   BOLD LINES DENOTE NEW WORK
   "/" DENOTES REMOVAL WORK

2 GUY TO ROOF. SEE KIUC DETAIL 2/E-202 FOR ADDITIONAL INFORMATION.

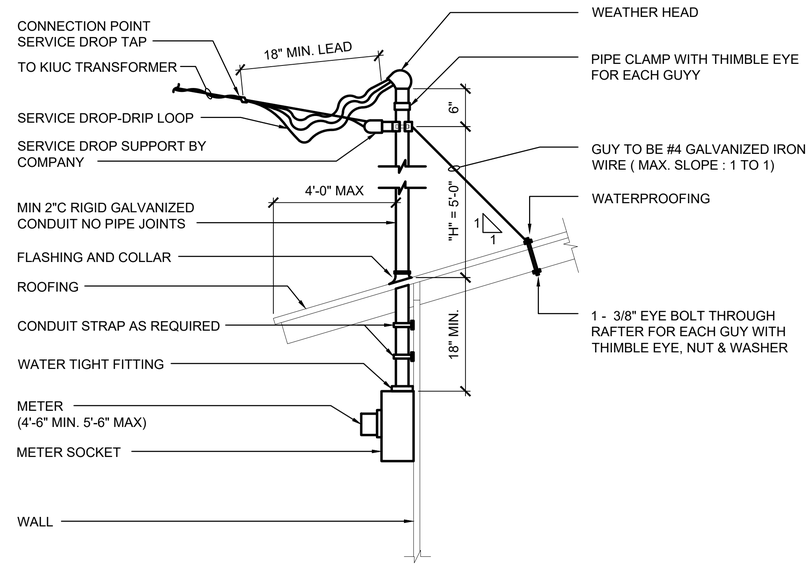

2 KIUC WEATHERHEAD DETAIL

SCALE: NTS

NOTES:

1. VERIFY REQUIREMENTS WITH KIUC.
2. THIS DIAGRAM IS INTENDED TO SHOW KIUC REQUIREMENTS FOR GUY MASTS, IN ACCORDANCE WITH N.E.C. SEC. 230.28.
3. FOR ALL TYPES OF SINGLE STORY ROOFING: "H" = 5 FEET.

REVISION NO.	SYM.	DESCRIPTION	SHT./OF	DATE	APPROVED

AARON C. HAMADA
LICENSED PROFESSIONAL ENGINEER
No. 8327-E
HAWAII, U.S.A.
#24002

MK ENGINEERS, LTD.
LICENSE EXPIRATION DATE: 4/30/28
This work was prepared by me or under my supervision and construction of this project will be under my observation. Observation of construction is defined in Section 16-115-2 of the Hawaii Administrative Rules of the Board of Professional Engineers, Architects, Surveyors and Landscape Architects of the State of Hawaii (dated 9/13/01; effective 10/26/01)
4/29/26

STATE OF HAWAII
DEPARTMENT OF LAND AND NATURAL RESOURCES
ENGINEERING DIVISION

KOKE'E STATE PARK
ELECTRICAL IMPROVEMENTS
WAIMEA, KAUAI, HAWAII

METERING ELEVATION - 2

FUKUNAGA AND ASSOCIATES, INC

DESIGNED:	ACH	SUBMITTED:	
DRAWN:	MKE	DATE:	APRIL 2026
CHECKED:	ACH	SCALE:	AS SHOWN
APPROVED:	Dina Lau E-signed 2026-05-07 07:15AM HST dina.u.lau@hawaii.gov State of Hawaii Civil Engineer	DRAWING NO.	E-202
CHIEF ENGIN			

JOB NO. F46C602F

C:\Users\dryn\OneDrive - MK Engineers LLC\02_CAD_24-25 - Documents\2024\24002_KokeeStatePk_ElecSvcMods\01_dwg\24002_E202_EvMAINTENANCE2.dwg, Layout1, 5/1/2026 10:50:50 AM, dryn, 1:1

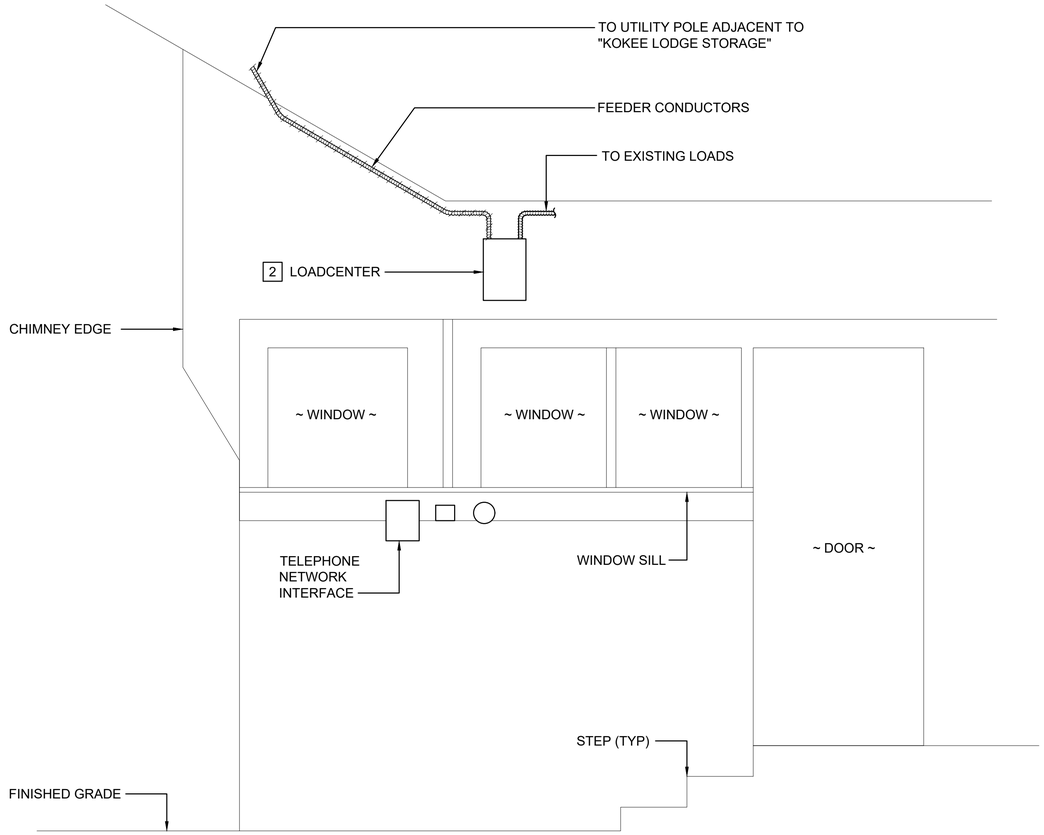

1 RANGER'S COTTAGE EQUPMENT ELEVATION - DEMO

SCALE: 3/4" = 1'-0"

0 1' 2' 3'
3/4" = 1'

NOTES:

1. ———— LIGHT LINES DENOTE EXISTING CONDITION

   ////////// "/" DENOTES REMOVAL WORK

2 CONVERT TO A JUNCTION BOX. REMOVE SURFACE RUST AND PAINT ENCLOSURE. PROVIDE NEW COVER.

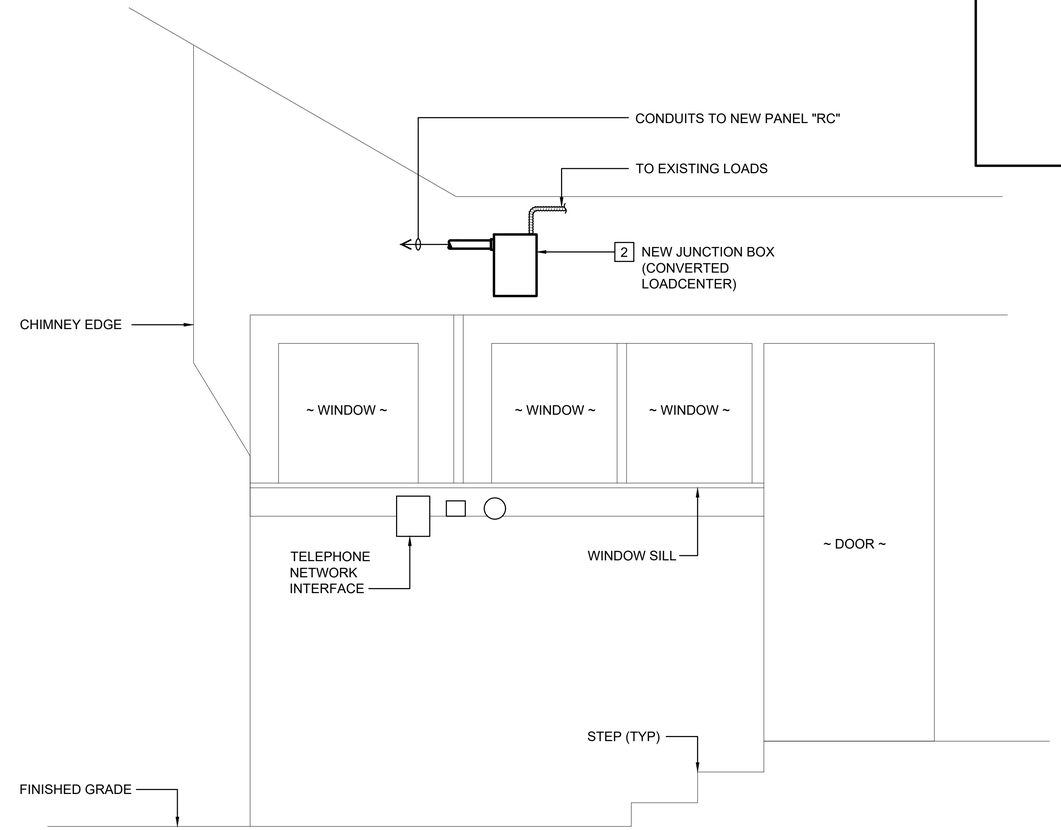

2 RANGER'S COTTAGE EQUIPMENT ELEVATION

SCALE: 3/4" = 1'-0"

0 1' 2' 3'
3/4" = 1'

NOTES:

1. ———— LIGHT LINES DENOTE EXISTING CONDITION

   ———— BOLD LINES DENOTE NEW WORK

2 CONVERT EXISTING LOADCENTER INTO JUNCTION BOX AND PRESERVE BRANCH CIRCUIT CONDUCTORS FOR RECONNECTION. PROVIDE NEW COVER. REMOVE SURFACE RUST AND REPAINT ENCLOSURE.

3. PROVIDE JUNCTION BOXES AS NEEDED TO LIMIT CONDUIT RUN TO NO MORE THAN (3) 90 DEGREE BENDS.

REVISION NO.	SYM.	DESCRIPTION	SHT./OF	DATE	APPROVED

AARON C. HAMADA
LICENSED PROFESSIONAL ENGINEER
No. 8327-E
HAWAII, U.S.A.
#24002

MK ENGINEERS, LTD.
LICENSE EXPIRATION DATE: 4/30/28
This work was prepared by me or under my supervision and construction of this project will be under my observation. Observation of construction is defined in Section 16-115-2 of the Hawaii Administrative Rules of the Board of Professional Engineers, Architects, Surveyors and Landscape Architects of the State of Hawaii (dated 9/13/01; effective 10/26/01)

4/29/26

STATE OF HAWAII
DEPARTMENT OF LAND AND NATURAL RESOURCES
ENGINEERING DIVISION

KOKE'E STATE PARK
ELECTRICAL IMPROVEMENTS
WAIMEA, KAUAI, HAWAII

RANGER'S COTTAGE ELEVATIONS

FUKUNAGA AND ASSOCIATES, INC

DESIGNED:	ACH	SUBMITTED:	
DRAWN:	MKE	DATE:	APRIL 2026
CHECKED:	ACH	SCALE:	AS SHOWN
APPROVED:	Dina Lau E-signed 2026-05-07 07:15AM HST dina.u.lau@hawaii.gov State of Hawaii Civil Engineer	DRAWING NO.	E-203
CHIEF ENGIN			

JOB NO. F46C602F

SHEET NO. 14 OF 21 SHEETS

K:\Jeremiahy\OneDrive - MK Engineers LLB\02_CAD_24-25 - Documents\2024\24002_KokeeStatePk_ElecSvcMods\01_dwg\24002_E203_EvRANGERS-CABIN.dwg, Layout1, 5/12/2026 10:59:51 AM, dwyn, 1:1

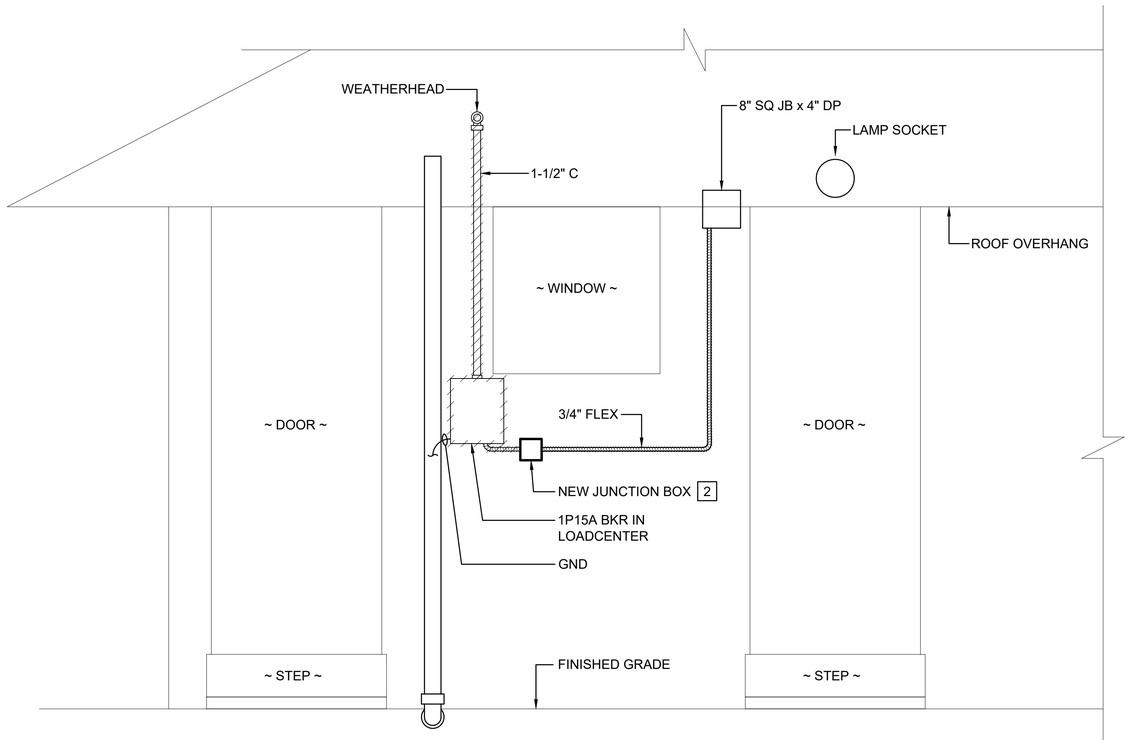

1 PARK HQ EQUIPMENT ELEVATION - DEMO

SCALE: 3/4" = 1'-0"

0 1' 2' 3'
3/4" = 1'

NOTES:

1. LIGHT LINES DENOTE EXISTING CONDITION
   BOLD LINES DENOTE NEW WORK
   "/" DENOTES REMOVAL WORK

2 PROVIDE NEW JUNCTION BOX TO INTERCEPT EXISTING BRANCH CIRCUIT CONDUIT AND CONDUCTORS. PRESERVE CONDUCTORS FOR RECONNECTION.

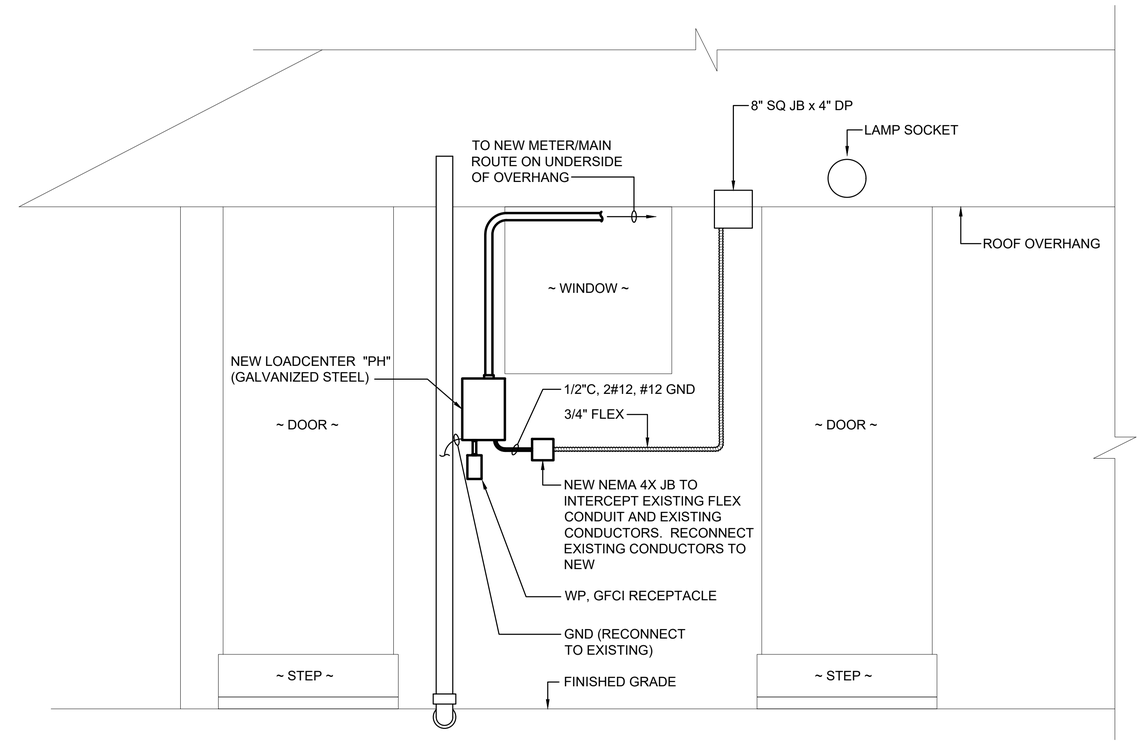

2 PARK HQ EQUIPMENT ELEVATION

SCALE: 3/4" = 1'-0"

0 1' 2' 3'
3/4" = 1'

NOTES:

1. LIGHT LINES DENOTE EXISTING CONDITION
   BOLD LINES DENOTE NEW WORK

REVISION NO.	SYM.	DESCRIPTION	SHT./OF	DATE	APPROVED

AARON C. HAMADA
LICENSED PROFESSIONAL ENGINEER
No. 8327-E
HAWAII, U.S.A.
#24002

MK ENGINEERS, LTD.
LICENSE EXPIRATION DATE: 4/30/28
This work was prepared by me or under my supervision and construction of this project will be under my observation. Observation of construction is defined in Section 16-115-2 of the Hawaii Administrative Rules of the Board of Professional Engineers, Architects, Surveyors and Landscape Architects of the State of Hawaii (dated 9/13/01; effective 10/26/01)
4/29/26

STATE OF HAWAII
DEPARTMENT OF LAND AND NATURAL RESOURCES
ENGINEERING DIVISION

KOKE'E STATE PARK
ELECTRICAL IMPROVEMENTS
WAIMEA, KAUAI, HAWAII

PARK HEADQUARTERS ELEVATIONS

FUKUNAGA AND ASSOCIATES, INC

DESIGNED:	ACH	SUBMITTED:	
DRAWN:	MKE	DATE:	APRIL 2026
CHECKED:	ACH	SCALE:	AS SHOWN
APPROVED:	Dina Lau E-signed 2026-05-07 07:15AM HST dina.u.lau@hawaii.gov State of Hawaii Civil Engineer	DRAWING NO.	E-204
CHIEF ENGIN			

JOB NO. F46C602F

C:\Users\dgyn\OneDrive - MK Engineers Ltd\02F_CAD_24-25 - Documents\2024\24002_KokeeStatePk_ElectSvcRoofs\01_dwg\24002_E204_ElvPARK-HQ.dwg, Layout1, 5/1/2026 10:50:53 AM, dgyn, 1:1

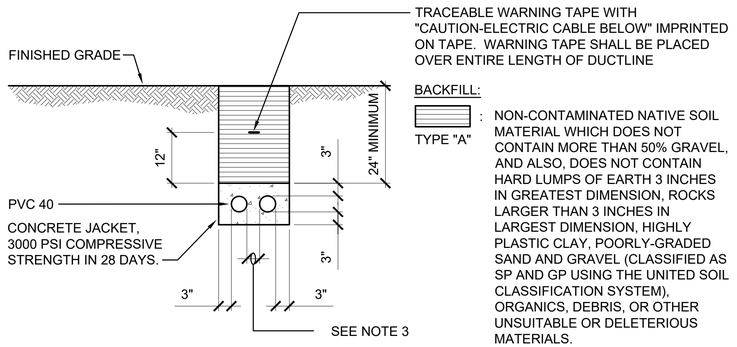

A TYPICAL DUCT SECTION (CONCRETE ENCASED)

SCALE: NTS

NOTES:

1. WHERE TRENCH ENCOUNTERS EXISTING CONCRETE OR ASPHALT CONCRETE, SURFACE SHALL BE SAWCUT. BACKFILL, COMPACT AND PATCH SURFACE TO MATCH ADJACENT AREA. SEE TRENCH RESTORATION DETAIL AND CONCRETE SIDEWALK RESTORATION DETAIL.
2. SEE DUCT SECTION DETAILS FOR CONDUIT ARRANGEMENT.
3. PROVIDE 3" SEPARATION BETWEEN DUCTS.

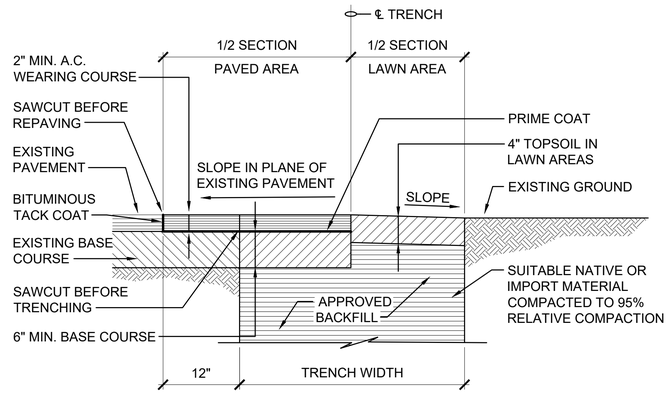

B TRENCH RESTORATION DETAIL

SCALE: NTS

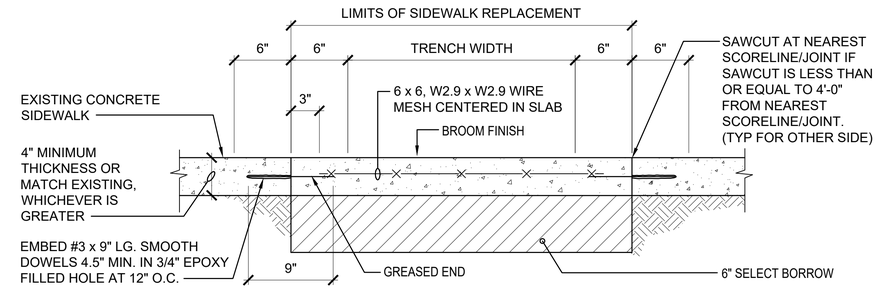

C CONCRETE SIDEWALK RESTORATION DETAIL

SCALE: NTS

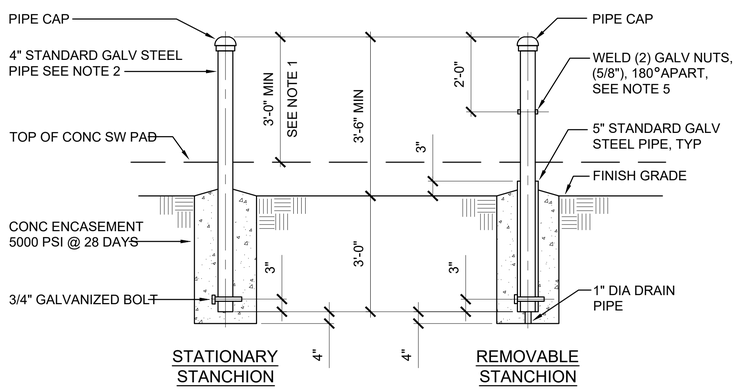

D STANCHION DETAIL

SCALE: NTS

NOTES:

1. ALL STANCHIONS SHALL BE INSTALLED AT THE SAME HEIGHT ABOVE GRADE.
2. STATIONARY STANCHIONS TO BE FILLED WITH CONCRETE TO WEIGH APPROXIMATELY 160 LBS.
3. WELDED NUTS ARE FOR SCREWING IN BOLTS TO ACT AS HANDLES FOR LIFTING REMOVABLE STANCHIONS. BOLT TO BE REMOVED AFTER INSTALLATION.
4. STANCHIONS SHALL BE PAINTED YELLOW PER ANSI SPEC. Z53.1 TO COMPLY WITH OSHA STANDARDS PER COLOR CODING.
5. STANCHION SHALL CONFORM TO ASTM A53.
6. STANCHION TYPE AND LOCATION SHALL REQUIRE APPROVAL FROM DEPARTMENT OF WATER.

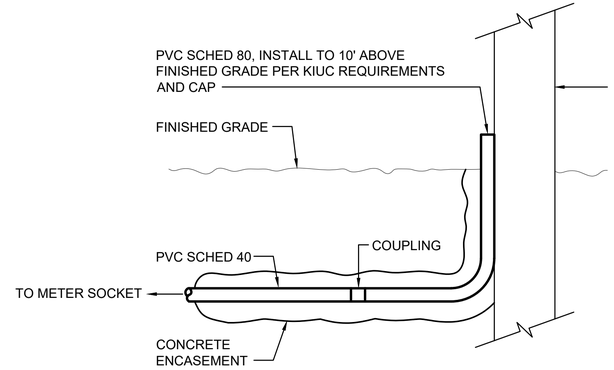

E UNDERGROUND TO EXPOSED TRANSITION DETAIL

SCALE: NTS

SECTION (A)

F DUCT SECTION DETAILS

SCALE: NTS

NOTES:

1. SEE (A / E-501) FOR ADDITIONAL INFORMATION.

REVISION NO.	SYM.	DESCRIPTION	SHT./OF	DATE	APPROVED

AARON C. HAMADA
LICENSED PROFESSIONAL ENGINEER
No. 8327-E
HAWAII, U.S.A.
#24002

MK ENGINEERS, LTD.
LICENSE EXPIRATION DATE: 4/30/28
This work was prepared by me or under my supervision and construction of this project will be under my observation. Observation of construction is defined in Section 16-115-2 of the Hawaii Administrative Rules of the Board of Professional Engineers, Architects, Surveyors and Landscape Architects of the State of Hawaii (dated 9/13/01; effective 10/26/01)
4/29/26

STATE OF HAWAII
DEPARTMENT OF LAND AND NATURAL RESOURCES
ENGINEERING DIVISION

KOKE'E STATE PARK
ELECTRICAL IMPROVEMENTS
WAIMEA, KAUAI, HAWAII

EXTERIOR ELECTRICAL DETAILS

FUKUNAGA AND ASSOCIATES, INC

DESIGNED:	ACH	SUBMITTED:	
DRAWN:	MKE	DATE:	APRIL 2026
CHECKED:	ACH	SCALE:	AS SHOWN
APPROVED:	Dina Lau E-signed 2026-05-07 07:15AM HST dina.u.lau@hawaii.gov State of Hawaii Civil Engineer	DRAWING NO.	E-501
CHIEF ENGIN			

C:\Users\dayn\OneDrive - MK Engineers LLP\02_CAD_24-25 - Documents\2024\24002_KokeeState\PL_ElecSrvcMods\01_dwg\24002_E501_EXtElecDet.dwg, Layout1, 5/13/2026 10:50:54 AM, dayn, 1:1

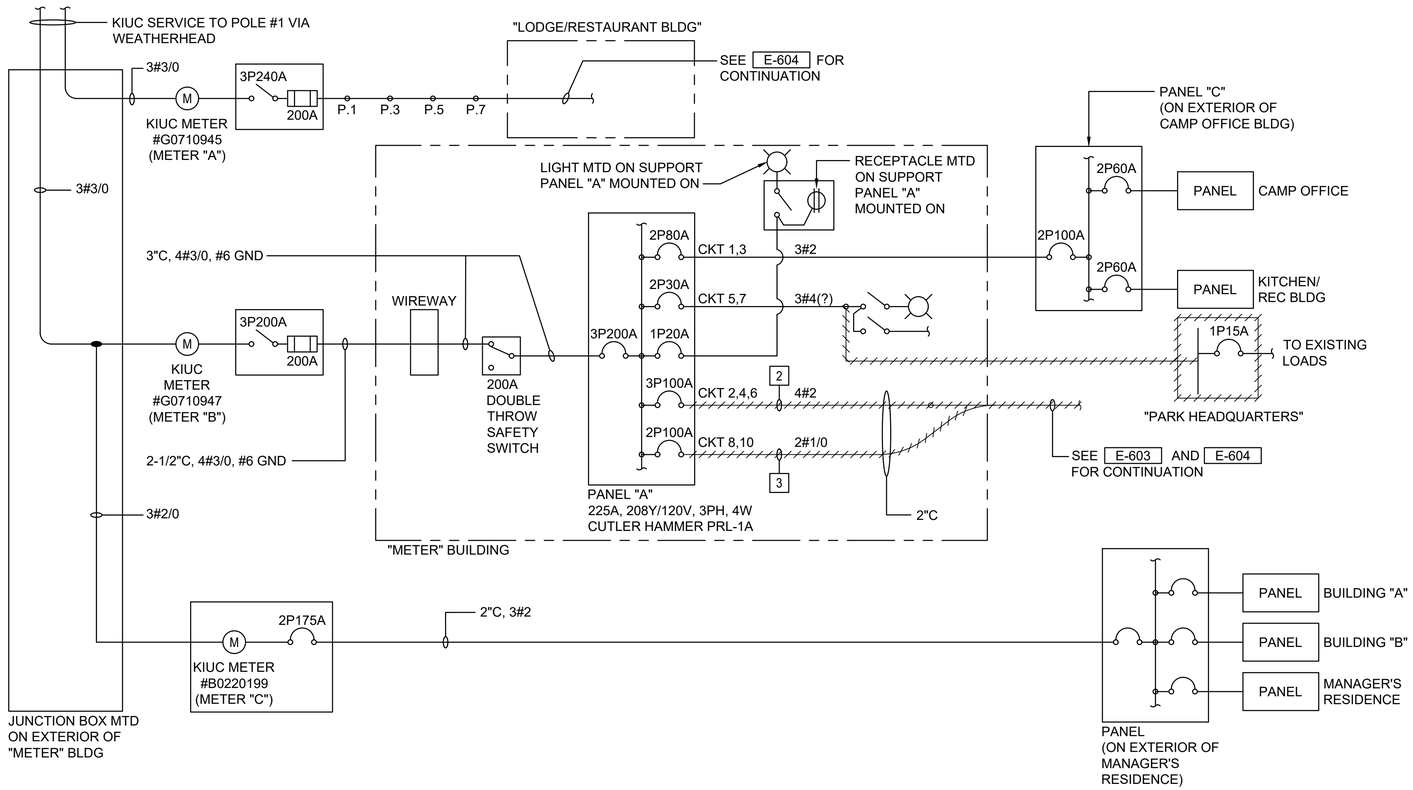

1 ONE-LINE DIAGRAM - (METERS A, B, C) - DEMO

SCALE: NTS

NOTES:

1. LIGHT LINES DENOTE EXISTING CONDITION
   BOLD LINES DENOTE NEW WORK
   "/" DENOTES REMOVAL WORK
   —R— "R" DENOTES REMOVAL OF CONDUCTORS FROM EXISTING CONDUIT. CONDUIT TO BE REUSED.

2 FEEDER FOR GARAGE 1 AND 2.

3 FEEDER FOR WORKSHOP.

REVISION NO.	SYM.	DESCRIPTION	SHT./OF	DATE	APPROVED

AARON C. HAMADA
LICENSED PROFESSIONAL ENGINEER
No. 8327-E
HAWAII, U.S.A.
#24002

MK ENGINEERS, LTD.
LICENSE EXPIRATION DATE: 4/30/28
This work was prepared by me or under my supervision and construction of this project will be under my observation. Observation of construction is defined in Section 16-115-2 of the Hawaii Administrative Rules of the Board of Professional Engineers, Architects, Surveyors and Landscape Architects of the State of Hawaii (dated 9/13/01; effective 10/28/01)
4/29/26

STATE OF HAWAII
DEPARTMENT OF LAND AND NATURAL RESOURCES
ENGINEERING DIVISION

KOKE'E STATE PARK
ELECTRICAL IMPROVEMENTS
WAIMEA, KAUAI, HAWAII

ONE-LINE DIAGRAM - (METERS A, B, C) - DEMO

FUKUNAGA AND ASSOCIATES, INC

DESIGNED:	ACH	SUBMITTED:	
DRAWN:	MKE	DATE:	APRIL 2026
CHECKED:	ACH	SCALE:	AS SHOWN
APPROVED:	Dina Lau E-signed 2026-05-07 07:15AM HST dina.u.lau@hawaii.gov State of Hawaii Civil Engineer	DRAWING NO.	E-601
CHIEF ENGIN			

JOB NO. F46C602F

SHEET NO. 17 OF 21 SHEETS

C:\Users\dayn\OneDrive - MK Engineers Ltd\02_CAD_24-25 - Documents\2024\24002_KokeeState\Pk_ElecSvcMods\01_dwg\24002_E601.dwg, Layout1, 5/7/2026 10:50:59 AM, dayn, 1:1

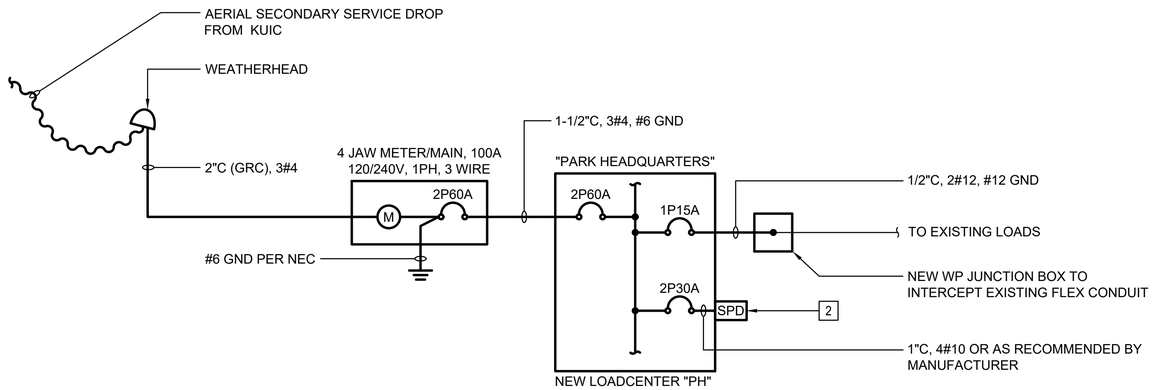

1 ONE-LINE DIAGRAM - PARK HEADQUARTERS

SCALE: NTS

NOTES:

1. ———— LIGHT LINES DENOTE EXISTING CONDITION
   ———— BOLD LINES DENOTE NEW WORK

2 SURGE PROTECTION DEVICE. SUITABLE FOR WET LOCATIONS.

REVISION NO.	SYM.	DESCRIPTION	SHT./OF	DATE	APPROVED

AARON C. HAMADA
LICENSED PROFESSIONAL ENGINEER
No. 8327-E
HAWAII, U.S.A.
#24002

MK ENGINEERS, LTD.
LICENSE EXPIRATION DATE: 4/30/28
This work was prepared by me or under my supervision and construction of this project will be under my observation. Observation of construction is defined in Section 16-115-2 of the Hawaii Administrative Rules of the Board of Professional Engineers, Architects, Surveyors and Landscape Architects of the State of Hawaii (dated 9/13/01, effective 10/26/01)
4/29/26

STATE OF HAWAII
DEPARTMENT OF LAND AND NATURAL RESOURCES
ENGINEERING DIVISION

KOKE'E STATE PARK
ELECTRICAL IMPROVEMENTS
WAIMEA, KAUAI, HAWAII

ONE-LINE DIAGRAM - PARK HEADQUARTERS

FUKUNAGA AND ASSOCIATES, INC

DESIGNED:	ACH	SUBMITTED:	
DRAWN:	MKE	DATE:	APRIL 2026
CHECKED:	ACH	SCALE:	AS SHOWN
APPROVED:	Dina Lau E-signed 2026-05-07 07:15AM HST dina.u.lau@hawaii.gov State of Hawaii Civil Engineer	DRAWING NO.	E-602
CHIEF ENGIN			

JOB NO. F46C602F

C:\Users\dsyn\OneDrive - MK Engineers Ltd\02F_CAD_24-25 - Documents\2024\24002_KokeeStatePk_ElectSvcRoute\01_dwg\24002_E602.dwg, Layout1, 5/1/2026 10:50:37 AM, dsyn, 1:1

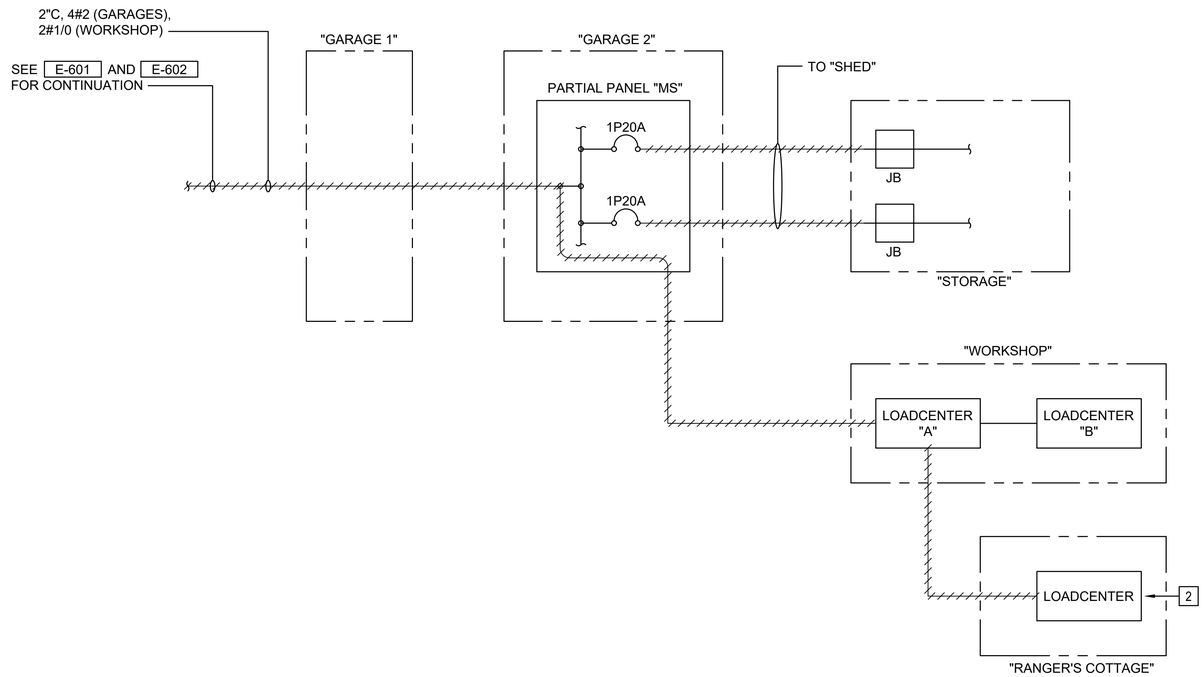

1 ONE-LINE DIAGRAM - GARAGES/STORAGE/WORKSHOP/RANGER'S COTTAGE - DEMO

SCALE: NTS

NOTES:

1. ———— LIGHT LINES DENOTE EXISTING CONDITION
   ━━━━ BOLD LINES DENOTE NEW WORK
   //////// "/" DENOTES REMOVAL WORK
   —— R —— "R" DENOTES REMOVAL OF CONDUCTORS FROM EXISTING CONDUIT. CONDUIT TO BE REUSED.

2. CONVERT TO JUNCTION BOX. PRESERVE EXISTING BRANCH CIRCUIT CONDUCTORS FOR RECONNECTION. REMOVE SURFACE RUST FROM ENCLOSURE AND PAINT. PROVIDE NEW BLANK COVER.

REVISION NO.	SYM.	DESCRIPTION	SHT./OF	DATE	APPROVED

AARON C. HAMADA
LICENSED PROFESSIONAL ENGINEER
No. 8327-E
HAWAII, U.S.A.
#24002

MK ENGINEERS, LTD.
LICENSE EXPIRATION DATE: 4/30/28
This work was prepared by me or under my supervision and construction of this project will be under my observation. Observation of construction is defined in Section 16-115-2 of the Hawaii Administrative Rules of the Board of Professional Engineers, Architects, Surveyors and Landscape Architects of the State of Hawaii (dated 9/13/01; effective 10/26/01)
4/29/26

STATE OF HAWAII
DEPARTMENT OF LAND AND NATURAL RESOURCES
ENGINEERING DIVISION

KOKE'E STATE PARK
ELECTRICAL IMPROVEMENTS
WAIMEA, KAUAI, HAWAII

ONE-LINE DIAGRAM - MAINT
SHED-SHED-KOKEE LODGE STORAGE - DEMO
FUKUNAGA AND ASSOCIATES, INC

DESIGNED:	ACH	SUBMITTED:	
DRAWN:	MKE	DATE:	APRIL 2026
CHECKED:	ACH	SCALE:	AS SHOWN
APPROVED:	Dina Lau E-signed 2026-05-07 07:15AM HST dina.u.lau@hawaii.gov State of Hawaii Civil Engineer	DRAWING NO.	E-603
CHIEF ENGIN			

JOB NO. F46C602F

SHEET NO. 19 OF 21 SHEETS

C:\Users\dayn\OneDrive - MK Engineers LLP\02_CAD_24-25 - Documents\2024\24002_KokeeStatePk_ElecSvcMods\01_dwg\24002_E603.dwg, Layout1, 5/7/2026 10:50:59 AM, dayn, 1:1

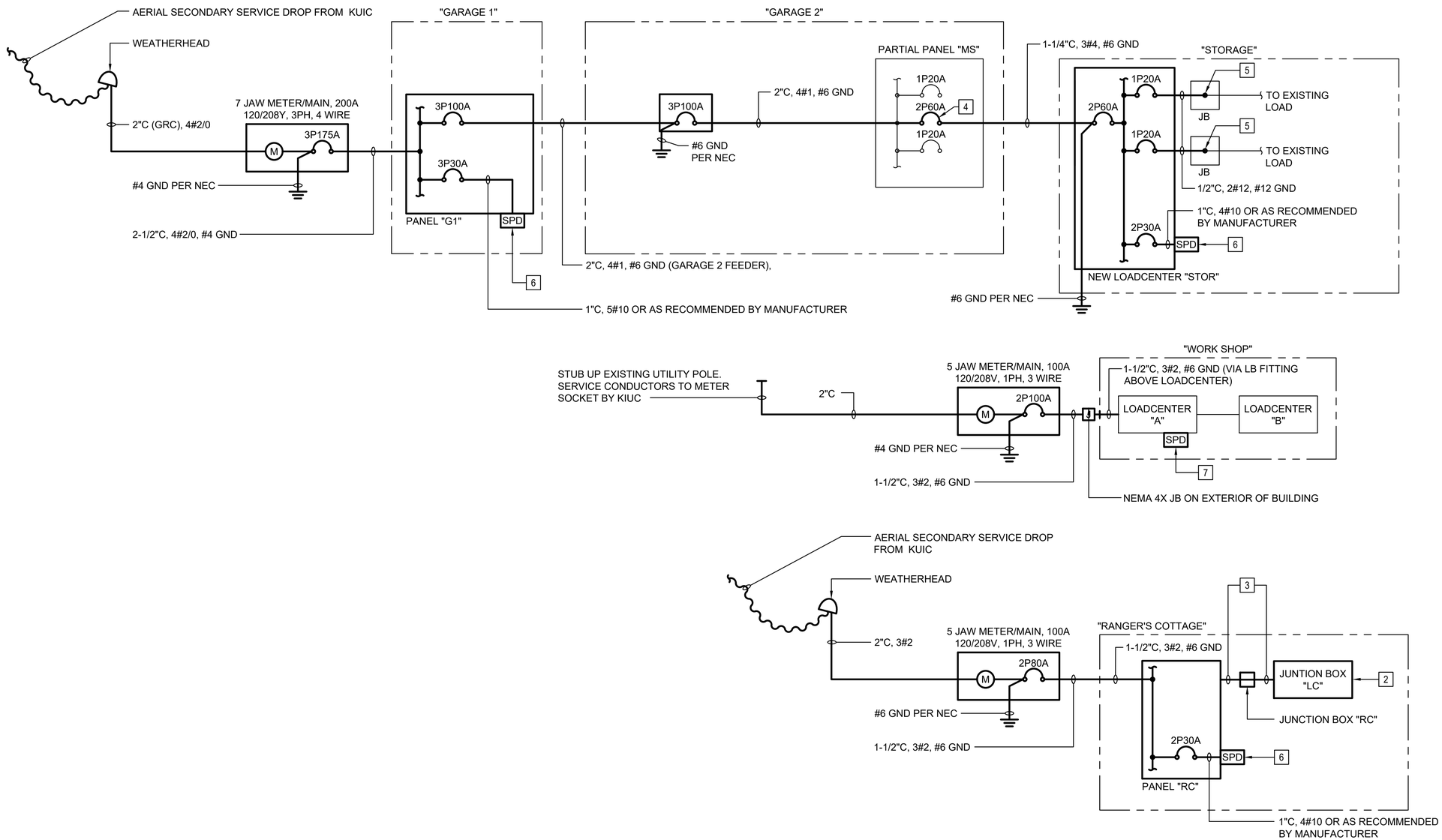

1 ONE-LINE DIAGRAM - GARAGES/STORAGE/WORKSHOP/RANGER'S COTTAGE

SCALE: NTS

NOTES:

1. ———— LIGHT LINES DENOTE EXISTING CONDITION
   ———— BOLD LINES DENOTE NEW WORK

2. EXISTING LOADCENTER CONVERTED TO JUNCTION BOX. RECONNECT EXISTING BRANCH CIRCUITS VIA NEW LOADCENTER.

3. 1/2"C, 2#12, #12 GND (FOR 2P20A BKR),
   1/2"C, 2#12, #12 GND (FOR 2P20A BKR),
   1/2"C, 2#12, #12 GND (FOR 2P20A BKR),
   3/4"C, 2#10, #10 GND (FOR 2P30A BKR),
   3/4"C, 6#12, #12 GND (FOR 1P BKRS, 3 EACH).

4. PROVIDE NEW CIRCUIT BREAKER IN EXISTING PANELBOARD (WESTINGHOUSE TYPE NQP).

5. SPLICE TO EXISTING CONDUCTORS.

6. SURGE PROTECTION DEVICE. SUITABLE FOR WET LOCATIONS.

7. SURGE PROTECTION DEVICE CONNECTED DIRECTLY TO LOADCENTER BUS. 4#10 OR AS RECOMMENDED BY MANUFACTURER.

REVISION NO.	SYM.	DESCRIPTION	SHT./OF	DATE	APPROVED

AARON C. HAMADA
LICENSED PROFESSIONAL ENGINEER
No. 8327-E
HAWAII, U.S.A.
#24002

MK ENGINEERS, LTD.
LICENSE EXPIRATION DATE: 4/30/28
This work was prepared by me or under my supervision and construction of this project will be under my observation. Observation of construction is defined in Section 16-115-2 of the Hawaii Administrative Rules of the Board of Professional Engineers, Architects, Surveyors and Landscape Architects of the State of Hawaii (dated 9/13/01; effective 10/26/01)
4/29/26

STATE OF HAWAII
DEPARTMENT OF LAND AND NATURAL RESOURCES
ENGINEERING DIVISION

KOKE'E STATE PARK
ELECTRICAL IMPROVEMENTS
WAIMEA, KAUAI, HAWAII

ONE-LINE DIAGRAM - MAINT
SHED-SHED-KOKEE LODGE STORAGE

FUKUNAGA AND ASSOCIATES, INC

DESIGNED:	ACH	SUBMITTED:	
DRAWN:	MKE	DATE:	APRIL 2026
CHECKED:	ACH	SCALE:	AS SHOWN
APPROVED:	Dina Lau E-signed 2026-05-07 07:15AM HST dina.u.lau@hawaii.gov State of Hawaii Civil Engineer	DRAWING NO.	E-604
CHIEF ENGIN			

JOB NO. F46C602F

SHEET NO. 20 OF 21 SHEETS

U:\aaronhdesign\OneDrive - MK Engineers Ltd\02E_CAD_24-25 - Documents\2024\24002_KokeeStatePk_ElecSvcMods\01_dwg\24002_E604.dwg, Layout1, 5/1/2026 10:51:01 AM, dwyn, 1:1

PANEL "PH" (PARK HEADQUARTERS)

VOLTAGE:	120/240V, 1 PH, 3W	MAIN BKR:	2P60A	EQUIPMENT GROUND BUS:	YES
BUS:	COPPER	TYPE:	PLUG-IN	ISOLATED GROUND BUS:	NO
BUS RATING:	125A	MOUNT:	SURFACE	FEED THRU LUGS:	NO
AIC:	10,000	ENCLOSURE:	NEMA 3R (GALVANIZED)	U.L. LISTED AS SERVICE	
SOURCE OF POWER:	KIUC			ENTRANCE EQUIPMENT:	YES

KVA A	KVA B		DESCRIPTION: L-LIGHTS R-RECEPTACLE, S-SPARE PFB-PROV FOR FUTURE CB	CKT BKR	CKT NO	CKT NO	CKT BKR	DESCRIPTION: L-LIGHTS R-RECEPTACLE, S-SPARE PFB-PROV FOR FUTURE CB	KVA A	KVA B	
0.5			LIGHTS AND RECEPTACLES	1P15A	1	2	1P20A	S			
	0.5		S	1P15A	3	4	1P20A	S			
			PFB	--	5	6	2P30A	SURGE PROTECTION			
	0.2		R - ADJ TO PNL	1P20A	7	8	--	---			
0.5	0.7		SUBTOTALS						0.0	0.0	

1.2 TOTAL KVA
0.8 DEMAND FACTOR
1.0 DEMAND KVA
5 DEMAND AMPS 208 volts

NOTES:

PANEL "STOR" (STORAGE BUILDING NEAR GARAGES)

VOLTAGE:	120/208V, 1 PH, 3W	MAIN BKR:	2P60A	EQUIPMENT GROUND BUS:	YES
BUS:	COPPER	TYPE:	PLUG-IN	ISOLATED GROUND BUS:	NO
BUS RATING:	125A	MOUNT:	SURFACE	FEED THRU LUGS:	NO
AIC:	10,000	ENCLOSURE:	NEMA 3R (GALVANIZED)	U.L. LISTED AS SERVICE	
SOURCE OF POWER:	PANEL "MS" IN GARAGE 2			ENTRANCE EQUIPMENT:	YES

KVA A	KVA B		DESCRIPTION: L-LIGHTS R-RECEPTACLE, S-SPARE PFB-PROV FOR FUTURE CB	CKT BKR	CKT NO	CKT NO	CKT BKR	DESCRIPTION: L-LIGHTS R-RECEPTACLE, S-SPARE PFB-PROV FOR FUTURE CB	KVA A	KVA B	
0.4			LIGHTS AND RECEPTACLES	1P20A	1	2	1P20A	S			
	0.4		LIGHTS AND RECEPTACLES	1P20A	3	4	1P20A	S			
0.2			R - ADJ TO PANEL	1P20A	5	6	2P30A	SURGE PROTECTION			
			S	1P20A	7	8	--	---			
0.6	0.4		SUBTOTALS						0.0	0.0	

1.0 TOTAL KVA
0.8 DEMAND FACTOR
0.8 DEMAND KVA
4 DEMAND AMPS 208 volts

NOTES:

PANEL "RC" (RANGER'S COTTAGE)

VOLTAGE:	120/208V, 1 PH, 3W	MAIN BKR:	LUGS ONLY	EQUIPMENT GROUND BUS:	YES
BUS:	COPPER	TYPE:	PLUG-IN	ISOLATED GROUND BUS:	NO
BUS RATING:	125A	MOUNT:	SURFACE	FEED THRU LUGS:	NO
AIC:	10,000	ENCLOSURE:	NEMA 4X	U.L. LISTED AS SERVICE	
SOURCE OF POWER:	KIUC			ENTRANCE EQUIPMENT:	YES

KVA A	KVA B		DESCRIPTION: L-LIGHTS R-RECEPTACLE, S-SPARE PFB-PROV FOR FUTURE CB	CKT BKR	CKT NO	CKT NO	CKT BKR	DESCRIPTION: L-LIGHTS R-RECEPTACLE, S-SPARE PFB-PROV FOR FUTURE CB	KVA A	KVA B	
0.4			EXISTING LOAD	2P20A	1	2	1P20A	EXISTING LOAD	0.5		
	0.4		EXISTING LOAD	--	3	4	1P20A	EXISTING LOAD		0.5	
0.4			EXISTING LOAD	2P20A	5	6	1P20A	EXISTING LOAD	0.5		
	0.4		EXISTING LOAD	--	7	8	1P20A	R - ADJ TO PNL		0.2	
0.4			EXISTING LOAD	2P20A	9	10	1P20A	S			
	0.4		EXISTING LOAD	--	11	12	1P20A	S			
			S	2P20A	13	14	1P20A	S			
			---	--	15	16	1P20A	S			
0.5			EXISTING LOAD	2P30A	17	18	--	PFB			
	0.5		EXISTING LOAD	--	19	20	--	PFB			
			PFB	--	21	22	2P30A	SURGE PROTECTION			
			PFB	--	23	24	--	---			
1.7	1.7		SUBTOTALS						1.0	0.7	

5.1 TOTAL KVA
0.8 DEMAND FACTOR
4.1 DEMAND KVA
17 DEMAND AMPS 240 volts

NOTES:

PANEL "G1" (GARAGE 1)

VOLTAGE:	208Y/120V, 3 PH, 4W	MAIN BKR:	LUGS ONLY	EQUIPMENT GROUND BUS:	YES
BUS:	COPPER	TYPE:	BOLT-ON	ISOLATED GROUND BUS:	NO
BUS RATING:	225A	MOUNT:	SURFACE	FEED THRU LUGS:	NO
AIC:	10,000	ENCLOSURE:	NEMA 4X	U.L. LISTED AS SERVICE	
SOURCE OF POWER:	KIUC VIA MAIN BREAKER			ENTRANCE EQUIPMENT:	YES

KVA A	KVA B	KVA C	DESCRIPTION: L-LIGHTS R-RECEPTACLE, S-SPARE PFB-PROV FOR FUTURE CB	CKT BKR	CKT NO	CKT NO	CKT BKR	DESCRIPTION: L-LIGHTS R-RECEPTACLE, S-SPARE PFB-PROV FOR FUTURE CB	KVA A	KVA B	KVA C
0.2			R - ADJ TO PANEL	1P20A	1	2	1P20A	L - TOOL STORAGE ROOM	0.2		
			S	1P20A	3	4	1P20A	L - EXTERIOR FLOOD LIGHT		0.3	
			S	1P20A	5	6	1P20A	S			0.5
			PFB	--	7	8	--	PFB			
			PFB	--	9	10	--	PFB			
			PFB	--	11	12	--	PFB			
			PFB	--	13	14	--	PFB			
			PFB	--	15	16	--	PFB			
			PFB	--	17	18	--	PFB			
			SURGE PROTECTION DEVICE	3P30A	19	20	3P100A	PANEL "MS" (IN GARAGE 2)	2.0		
			----	----	21	22	--	--		2.0	
			----	----	23	24	--	--			2.0
0.2	0.0	0.0	SUBTOTALS						2.2	2.3	2.5

NOTES:

7.2 TOTAL KVA
0.8 DEMAND FACTOR
5.8 DEMAND KVA
16 DEMAND AMPS 208 volts

REVISION NO.	SYM.	DESCRIPTION	SHT./OF	DATE	APPROVED

AARON C. HAMADA
LICENSED PROFESSIONAL ENGINEER
No. 8327-E
HAWAII, U.S.A.
#24002

MK ENGINEERS, LTD.
LICENSE EXPIRATION DATE: 4/30/28
This work was prepared by me or under my supervision and construction of this project will be under my observation. Observation of construction is defined in Section 16-115-2 of the Hawaii Administrative Rules of the Board of Professional Engineers, Architects, Surveyors and Landscape Architects of the State of Hawaii (dated 9/13/01, effective 10/26/01)
4/29/26

STATE OF HAWAII
DEPARTMENT OF LAND AND NATURAL RESOURCES
ENGINEERING DIVISION

KOKE'E STATE PARK
ELECTRICAL IMPROVEMENTS
WAIMEA, KAUAI, HAWAII

PANEL SCHEDULES

FUKUNAGA AND ASSOCIATES, INC

DESIGNED:	ACH	SUBMITTED:	
DRAWN:	MKE	DATE:	APRIL 2026
CHECKED:	ACH	SCALE:	AS SHOWN
APPROVED:	Dina Lau E-signed 2026-05-07 07:15AM HST dina.u.lau@hawaii.gov State of Hawaii Civil Engineer	DRAWING NO.	E-701
CHIEF ENGIN			

JOB NO. F46C602F SHEET NO. 21 OF 21 SHEETS

C:\Users\dayn\OneDrive - MK Engineers Ltd\02F_CAD_24-25 - Documents\2024\24002_KokeeStatePk_ElecSvcRoofs\01_dwg\24002_E701_Panels.dwg, Layout1, 5/7/2025 10:51:19 AM, dayn, 1:1